

LOCATION MAP SCALE: NOT SCALE

WOLCOTT WOODS
GREAT ESTATE PLANNED UNIT DEVELOPMENT

1672-1726 CANTON AVENUE
MILTON, MASSACHUSETTS

AUGUST 31, 2018

INDEX

SHEET	DESCRIPTION
C1.1	COVER AND INDEX
C1.2	GENERAL NOTES, LEGEND, SYMBOLS & ABBREVIATIONS
C2.1–2.4	EXISTING CONDITIONS PLAN
C3.1–3.4	SITE LAYOUT PLAN
C4.1–4.4	GRADING AND DRAINAGE PLAN
C5.1–5.4	UTILITY PLAN
C6.1–6.5	ROADWAY PLAN AND PROFILE
C7.1–7.3	OVERALL SITE CROSS SECTIONS
C8.1–8.4	DEMOLITION PLAN
C9.1–9.4	CONSTRUCTION PHASING AND EROSION CONTROL PLAN
C10.1–10.7	CONSTRUCTION DETAILS
OS1.1	OPEN SPACE AREA PLAN
OS1.2	OPEN SPACE MANAGEMENT PLAN
L1.0–1.4	LANDSCAPE SITE PLANS
L2.0	ENTRANCE LANDSCAPE PLAN
L2.1	DEVENS HOUSE LANDSCAPE PLAN
L2.2	MANOR HOUSE LANDSCAPE PLAN
L2.3	TYPICAL UNIT LANDSCAPE PLAN
L2.4	WOLCOTT HOUSE LANDSCAPE PLAN
L4.0–4.2	LANDSCAPE DETAIL PLANS

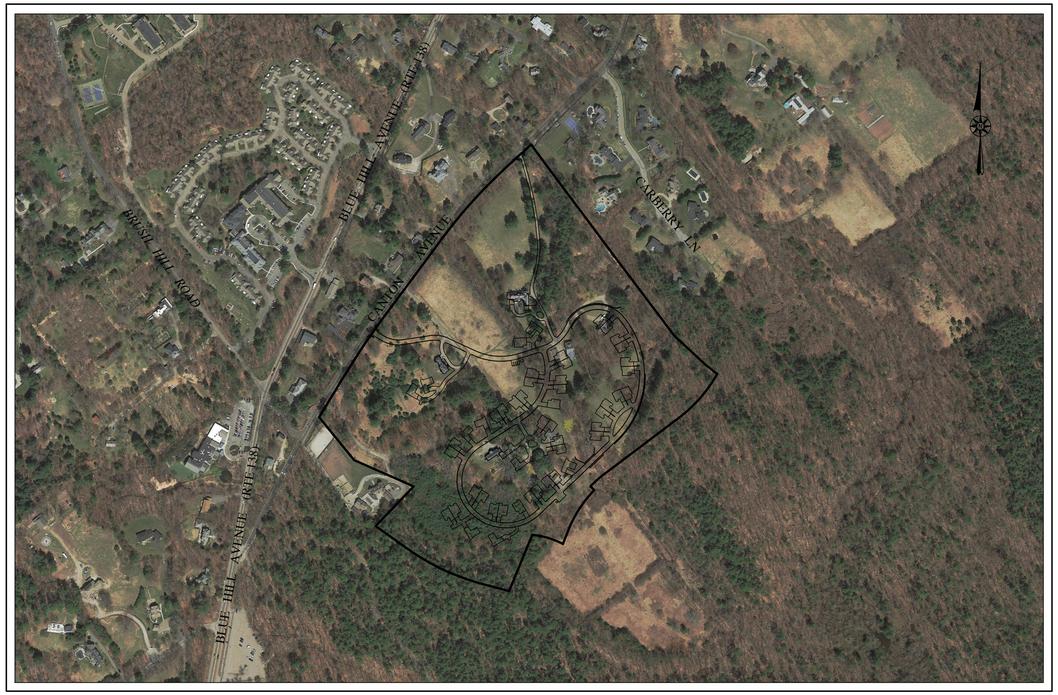

VICINITY MAP

SCALE: 1"=350'

350 0 350 700 1050

SCALE IN FEET

OWNER/APPLICANT:
WOLCOTT RESIDENTIAL, LLC
80 BEHARRELL STREET, SUITE E
CONCORD, MASSACHUSETTS 01742
P: 781-229-4700

ATTORNEY:
CORCORAN & ASSOCIATES, PC
1266 FURNACE BROOK PARKWAY
QUINCY, MA 02169
P: 617-770-2710

CIVIL ENGINEER/SURVEYOR:
MERRILL ENGINEERS AND LAND SURVEYORS
427 COLUMBIA ROAD
HANOVER, MA 02339
P: 781-826-9200

LANDSCAPE ARCHITECT:
RYAN ASSOCIATES LANDSCAPE ARCHITECTURE AND PLANNING
144 MOODY STREET, BUILDING 4
WALTHAM, MASSACHUSETTS 02453
P: 781-314-0401

ARCHITECT:
GRAZADO VELLECO ARCHITECTS
LITTLE HARBOR
10 DOAKS LANE
MARBLEHEAD, MASSACHUSETTS 01945
P: 781-631-4949

ARBORIST:
TREE SPECIALISTS, INC
140 WASHINGTON STREET
HOLLISTON, MA 01746
P: 508-429-8733

TRANSPORTATION ENGINEER:
VANASSE & ASSOCIATES, INC.
35 NEW ENGLAND BUSINESS CENTER DRIVE, SUITE 140
ANDOVER, MA 01810
P: 978-474-8800

COPYRIGHT © BY MERRILL CORPORATION
NO PART OF THIS DOCUMENT MAY BE REPRODUCED, STORED IN A RETRIEVAL SYSTEM, OR TRANSMITTED IN ANY FORM OR BY ANY MEANS, ELECTRONIC, MECHANICAL, PHOTOCOPYING, RECORDING OR OTHERWISE, WITHOUT THE EXPRESS WRITTEN CONSENT OF MERRILL CORPORATION WITH THE EXCEPTION OF ANY REGULATORY AUTHORITY WHICH MAY REPRODUCE IT IN CONJUNCTION WITH THE PERFORMANCE OF OFFICIAL BUSINESS UNDER ITS JURISDICTION. ANY MODIFICATIONS MADE TO THIS DOCUMENT WITHOUT THE EXPRESS WRITTEN CONSENT OF MERRILL CORPORATION SHALL RENDER IT UNUSABLE.

REVISIONS

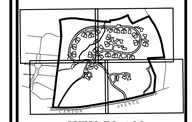

KEY PLAN



DRAWN BY: JG

DESIGNED BY: JG/DWK

CHECKED BY: DWK

Merrill
Engineers and Land Surveyors
427 COLUMBIA ROAD, HANOVER, MA 02339 / T: (781) 826-9200
26 UNION STREET, PLYMOUTH MA 02360 / T: (508) 746-6060
WWW.MERRILLINC.COM

SITE PLAN
WOLCOTT WOODS
MILTON, MASSACHUSETTS

PREPARED FOR: WOLCOTT RESIDENTIAL, LLC
80 BEHARRELL STREET, SUITE E
CONCORD, MASSACHUSETTS 01742

AUGUST 31, 2018

SCALE: AS NOTED

JOB No. 16-079

LATEST REVISION:

COVER & INDEX

SHEET C1.1

ABBREVIATIONS

ABAN	ABANDONED
AC	AIR CONDITIONING UNIT
ACR	ACCESSIBLE CURB RAMP
ADJ	ADJUST
APPROX	APPROXIMATE
B	BOLLARD
BD	BOUND
BIT CONC	BITUMINOUS CONCRETE
BLDG	BUILDING
BH	BULKHEAD
BRW	BRICK RETAINING WALL
BM	BENCHMARK
BS	BOTTOM OF SLOPE
CB	CATCH BASIN
C&C	CUT AND CAPPED
CB/DH	CONC. BOUND/DRILL HOLE
CCB	CAPE COD BERM
C.I.	CAST IRON
C.L.D.I.	CEMENT LINED DUCTILE IRON
CIT	CHANGE IN TYPE
℄	CENTERLINE
CLF	CHAIN LINK FENCE
CO	CLEAN OUT
CONC	CONCRETE
CRW	CONCRETE RETAINING WALL
COND	CONDUIT
CMP	CORRUGATED METAL PIPE
CPP	CORRUGATED POLYETHYLENE PIPE
CTV	CABLE TELEVISION
CULV	CULVERT
Δ	DELTA ANGLE
D	DRAIN
DCB	DOUBLE CATCH BASIN
D.I.	DUCTILE IRON
DMH	DRAIN MANHOLE
DYCL	DOUBLE YELLOW CENTERLINE
E	ELECTRIC
ECC	EXTRUDED CONCRETE CURB
EL	ELEVATION
EMH	ELECTRIC MANHOLE
E/T/C	ELECTRIC, TELEPHONE, & CABLE TV
EHH	ELECTRIC HANDHOLE
EM	ELECTRIC METER
EOP	EDGE OF PAVEMENT
EXIST	EXISTING
FAB	FIRE ALARM BOX
FES	FLARED END SECTION
FND.	FOUND
FND	FOUNDATION
F.O.S.	FULL OF SAND
F.O.W.	FULL OF WATER
F&C	FRAME AND COVER
F&G	FRAME AND GRATE
G	GAS
GG	GAS GATE
GM	GAS METER
GS	GAS SERVICE
GR	GUARD RAIL
GRAN.	GRANITE
GUY	GUY WIRE
HDPE	HIGH DENSITY POLYETHYLENE
HH	HANDHOLE
HOR	HORIZONTAL
HP	HIGH PRESSURE
HWL	HEADWALL
HYD	HYDRANT
INV	INVERT
I.P.	IRON PIN
I.R.	IRON ROD
LD	LANDSCAPE
LP	LIGHT POLE
MAX	MAXIMUM
MB	MAILBOX
MH	MANHOLE
MHB	MASS. HIGHWAY BOUND
MIN	MINIMUM
NAVD	NORTH AMERICAN VERTICAL DATUM
NHESP	NATURAL HERITAGE ENDANGERED SPECIES PROGRAM
NIC	NOT IN CONTRACT
NTS	NOT TO SCALE
OHW	OVERHEAD WIRE
PB	PULL BOX
PE	POLYETHYLENE PIPE
PL	PROPERTY LINE
PROP	PROPOSED
PVC	POLYVINYL CHLORIDE PIPE
PVMT	PAVEMENT
PWW	PAVED WATER WAY
R	RIM
RCP	REINFORCED CONCRETE PIPE
REM	REMOVE
RET	RETAIN
ROW	RIGHT OF WAY
RR	RAILROAD
R&R	REMOVE AND RESET
R&S	REMOVE AND STACK
S	SEWER
SB	STONE BOUND
SB/DH	STONE BOUND/DRILL HOLE
SGE	SLOPED GRANITE EDGING
SMH	SEWER MANHOLE
STA	STATION
SS	SEWER SERVICE
SW	SIDEWALK
SRW	STONE RETAINING WALL
T	TELEPHONE
TCB	TRAFFIC CONTROL BOX
TL	TRAFFIC LIGHT
TMH	TELEPHONE MANHOLE
TOF	TOP OF FOUNDATION
TRANS	TRANSFORMER
TS	TOP OF SLOPE
TSV	TAPPING SLEEVE, VALVE AND BOX
TYP	TYPICAL
UP	UTILITY POLE
VCP	VITRIFIED CLAY PIPE
VERT	VERTICAL
VGC	VERTICAL GRANITE CURB
W	WATER MAIN
WF	WETLAND FLAG
WG	WATER GATE
WM	WATER MAIN
WRW	WOOD RETAINING WALL

COPYRIGHT © BY MERRILL CORPORATION
NO PART OF THIS DOCUMENT MAY BE REPRODUCED, STORED IN A RETRIEVAL SYSTEM, OR TRANSMITTED IN ANY FORM OR BY ANY MEANS, ELECTRONIC, MECHANICAL, PHOTOCOPYING, RECORDING OR OTHERWISE, WITHOUT THE EXPRESS WRITTEN CONSENT OF MERRILL CORPORATION WITH THE EXCEPTION OF ANY REGULATORY AUTHORITY WHICH MAY REPRODUCE IT IN CONJUNCTION WITH THE PERFORMANCE OF OFFICIAL BUSINESS UNDER ITS JURISDICTION. ANY MODIFICATIONS MADE TO THIS DOCUMENT WITHOUT THE EXPRESS WRITTEN CONSENT OF MERRILL CORPORATION SHALL RENDER IT UNUSABLE.

LEGEND

EXISTING	DESCRIPTION	PROPOSED
30	1' CONTOUR	30
+30.5	SPOT ELEVATION	+30.5
	PROPERTY LINE	
EDGE OF PAVEMENT	EDGE OF PAVEMENT	EOP
VGC	VERTICAL GRANITE CURB	VGC
SGC	SLOPE GRANITE CURB	SGC
CCB	CAPE COD BERM	CCB
EDGE OF GRAVEL	EDGE OF GRAVEL	
BRICK WALKWAY	BRICK WALK	
RET WALL	RETAINING WALL	RET WALL
W — WATER LINE	WATER LINE	W
T&C — TEL & CABLE	TELEPHONE & CABLE	T&C
ETC — ELEC TEL CABLE	ELECTRIC & TELEPHONE CABLE	ETC
E — ELECTRIC LINE	ELECTRIC SERVICE	E
UEL — UNDERGROUND ELECTRIC LINE	UNDERGROUND ELECTRIC SERVICE	UEL
OHW — OVERHEAD WIRE	OVERHEAD WIRE	OHW
OHE — OVERHEAD ELECTRIC	OVERHEAD ELECTRIC WIRE	OHE
S — SEWER LINE	SEWER LINE	S
D — 12"RCP	DRAIN LINE	D — 12"RCP
EXIST. STONEWALL	STONE WALL	
EXIST. FENCE	FENCE	
EXIST. GUARD RAIL	GUARDRAIL	
100' WETLAND BUFFER	100 FT WETLAND BUFFER	
25' NON-DISTURBANCE ZONE	50 FT WETLAND BUFFER	
IBB5 … IBB6	LIMIT OF INLAND BANK	
WFA5 … UPLAND / WETLAND … WFA6	LIMIT OF BORDERING VEGETATED WETLAND	
HYD	HYDRANT	HYD
WG	WATER GATE	WG
GG	GAS GATE	GG
GM	GAS METER	GM
EM	ELECTRICAL METER	EM
AREA LIGHT	LIGHT	AREA LIGHT
UP	UTILITY POLE	UP
GUY	GUY WIRE	
	SEPTIC TANK	
SMH R=138.82 SMH	SEWER MANHOLE	SMH
TH#1	TEST HOLE	
MW	MONITORING WELL	MW
MH	UNIDENTIFIED MANHOLE	
TMH	TELEPHONE MANHOLE	
EMH	ELECTRICAL MANHOLE	
DMH R=138.15 DMH	DRAIN MANHOLE	DMH
CB R=138.68 CB	CATCH BASIN	CB
RD	ROOF DRAIN	RD
FES	FLARED END SECTION	FES
AC AC	AIR CONDITIONER UNITS	AC AC
FLAG POLE	FLAG POLE	FLAG POLE
EXISTING BUILDING	EXISTING BUILDING	PROPOSED BUILDING
	DOORWAY	
SIGN	SIGN	SIGN
BOLLARD	BOLLARD	BOLLARD
MB73 U.S. MAIL	MAILBOX	MB73 U.S. MAIL
WELL	WELL	
EHH	ELECTRICAL HAND HOLE	EHH
TEL	TELEPHONE ACCESS BOX	TEL
CTV	CABLE TV ACCESS BOX	CTV
ICV	IRRIGATION CONTROL VALVE	
BOULDER	BOULDER/ROCK	
	TREES	

RECORD OWNERS:

ASSESSORS PARCEL I.D. M-2-2
1702 CANTON AVENUE
CARBERRY FAMILY LIMITED PARTNERSHIP
DEED BOOK 32060 PAGE 325
LOT A SHOWN ON PLAN No. 272 OF 1935 PLAN BOOK 119

ASSESSORS PARCEL I.D. M-2-40
1726 CANTON AVENUE
CARBERRY FAMILY LIMITED PARTNERSHIP
DEED BOOK 32225 PAGE 48
LOTS 1-4 AND 35-41 SHOWN ON
PLAN No. 916 OF 1989 PLAN BOOK 385

ASSESSORS PARCEL I.D. M-2-4
NO ADDRESS ASSIGNED
CARBERRY FAMILY LIMITED PARTNERSHIP
DEED BOOK 32060 PAGE 328
LOT B SHOWN ON PLAN No. 272 OF 1935 PLAN BOOK 119

ASSESSORS PARCEL I.D. M-2-29A
NO ADDRESS ASSIGNED
WOLCOTT RESIDENTIAL, LLC
DEED BOOK 34179 PAGE 473
PARCEL B SHOWN ON PLAN No. 916 OF 1989 PLAN BOOK 385

ASSESSORS PARCEL I.D. M-2-29
PARCEL 1
1672 CANTON AVENUE
WOLCOTT RESIDENTIAL, LLC
DEED BOOK 34179 PAGE 470
LOT 29 SHOWN ON PLAN No. 916 OF 1989 PLAN BOOK 385

PARCEL 2
1656 CANTON AVENUE
WOLCOTT RESIDENTIAL, LLC
DEED BOOK 34179 PAGE 470
LOTS 22, 23, 30, 31, 32, 33 AND 34 SHOWN ON
PLAN No. 916 OF 1989 PLAN BOOK 385

PARCEL 3
1640 CANTON AVENUE
WOLCOTT RESIDENTIAL, LLC
DEED BOOK 34179 PAGE 470
PARCEL A SHOWN ON PLAN No. 916 OF 1989 PLAN BOOK 385

PARCEL 4
CANTON AVENUE
WOLCOTT RESIDENTIAL, LLC
DEED BOOK 34179 PAGE 470
LOTS 24, 25, 26, 27 AND 28 SHOWN ON
PLAN No. 916 OF 1989 PLAN BOOK 385

OVERALL PROJECT AREA:

2,049,686± S.F. OR 47.054± ACRES

GENERAL NOTES:

1. PROPERTY LINE, STREET LINE AND OWNER INFORMATION WAS COMPILED FROM RECORDS ON FILE AT THE NORFOLK COUNTY REGISTRY OF DEEDS AND MILTON TOWN HALL.
2. TOPOGRAPHIC AND DETAIL INFORMATION SHOWN ON THIS PLAN IS BASED UPON AN ACTUAL ON THE GROUND SURVEY PERFORMED BY MERRILL ENGINEERS AND LAND SURVEYORS BETWEEN MAY 2016 AND AUGUST 2018.
3. CANTON AVENUE IS DESIGNATED AS A SCENIC ROAD IN THE TOWN OF MILTON.
4. ALL ELEVATIONS ARE BASED ON THE 1988 NORTH AMERICAN VERTICAL DATUM (NAVD 88). HORIZONTAL DATUM REFERENCED TO THE MASSACHUSETTS MAINLAND NAD83 STATE PLANE COORDINATE SYSTEM.
5. THE SUBJECT SITE IS LOCATED WITHIN THE "RESIDENCE AA (RAA)" ZONING DISTRICT PER THE MAY OF 2002 TOWN OF MILTON ZONING MAP.
6. THE LOCATIONS OF EXISTING UNDERGROUND UTILITIES SHOWN ON THIS PLAN ARE BASED ON FIELD OBSERVATIONS AND RECORD INFORMATION THEY ARE NOT WARRANTED TO BE EXACTLY LOCATED AS SHOWN OR THAT ALL UNDERGROUND UTILITIES OR OTHER STRUCTURES ARE SHOWN ON THIS PLAN. THE LAND SURVEYOR MAKES NO GUARANTEES THAT THE UNDERGROUND UTILITIES SHOWN HERON COMPRISE ALL SUCH UTILITIES IN THE AREA, EITHER IN SERVICE OR ABANDONED. THE LAND SURVEYOR FURTHER DOES NOT WARRANT THAT THE UNDERGROUND UTILITIES SHOWN ARE IN THE EXACT LOCATION INDICATED ALTHOUGH HE DOES CERTIFY THAT THEY ARE LOCATED AS ACCURATELY AS POSSIBLE FROM AVAILABLE INFORMATION AND CONSTRUCTION AS THE LAND SURVEYOR HAS NOT PHYSICALLY LOCATE THE UNDERGROUND UTILITIES. BEFORE CONSTRUCTION, CALL DIG SAFE SYSTEMS, INC. AT 1-888-344-7233
7. SUBSURFACE SEPTIC SYSTEM LOCATIONS REMAIN UNDETERMINED AFTER PERFORMING RESEARCH WITH TOWN OF MILTON BOARD OF HEALTH AND RECORD LAND OWNERS – ABOVE GROUND OBSERVED EVIDENCE SHOWN HEREON ONLY.
8. SEE UNDERGROUND EASEMENT SHOWN ON PLAN No. 78 OF 1935 – LOCATION NOT SHOWN HEREON AND LEGAL STATUS OF EASEMENT UNDETERMINED.
9. SEE COMCAST EASEMENT AND RIGHT OF WAY REFERENCED IN DEED BOOK 23432 PAGE 165 – UTILITY POLES AND WIRES OBSERVED DURING FIELD SURVEY SHOWN HEREON.
10. INTERIOR RIGHT OF WAY AND LOT LINES PER APPROVED SUBDIVISION PLAN RECORDED AS PLAN No. 916 OF 1989 PLAN BOOK 385 IN NORFOLK REGISTRY OF DEEDS ARE NOT SHOWN FOR THE PURPOSE OF THIS PLAN.
11. BY GRAPHIC PLOTTING ONLY, THIS PROPERTY IS LOCATED IN ZONE "X" OF THE FLOOD INSURANCE RATE MAP, AS SHOWN ON MAP No. 25021C0201E, WHICH BEARS AN EFFECTIVE DATE OF JULY 17, 2012, AND IS NOT LOCATED WITHIN A SPECIAL FLOOD HAZARD AREA.
12. WETLAND RESOURCE AREAS SHOWN HERON WERE DELINEATED BY ENVIRONMENTAL CONSULTING AND RESTORATION, LLC BETWEEN MAY 26 AND MAY 27, 2016. THE WETLAND RESOURCE AREAS WERE REVIEWED AND APPROVED UNDER THE ORDER OF RESOURCE AREA DELINEATION (ORAD) (DEP FILE #046-0512) DATED DECEMBER 20, 2016.
13. THE WETLAND FLAG LOCATIONS SHOWN HEREON ARE THE RESULT OF AN ON THE GROUND INSTRUMENT SURVEY PERFORMED BY MERRILL ENGINEERS AND LAND SURVEYORS DURING JUNE 2016.
14. THE SITE IS NOT WITHIN AN A.C.E.C. (AREA OF CRITICAL ENVIRONMENTAL CONCERN), DOES NOT CONTAIN A CERTIFIED VERNAL POOL PER NHESP MAP AUGUST 1, 2017 "CERTIFIED VERNAL POOLS" AND IS NOT WITHIN PRIORITY HABITATS OF RARE SPECIES
15. THE SITE IS NOT WITHIN A STATE APPROVED ZONE II GROUND WATER RECHARGE PROTECTION AREA.
16. ANY CHANGE IN THE FIELD CONDITION SHOULD BE REPORTED TO THE ENGINEER TO INSURE THAT ANY MODIFICATIONS TO THE ORIGINAL DESIGN ARE PROPER AND ADEQUATE TO SERVE THE PROJECT'S NEEDS AND COMPLY WITH THE APPLICABLE STANDARDS AND REGULATIONS.
17. ALL CONSTRUCTION SHALL CONFORM TO THE RULES AND REGULATIONS OF THE TOWN OF MILTON PLANNING BOARD AND DEPARTMENT OF PUBLIC WORKS SPECIFICATIONS. THE CONTRACTOR SHALL COMPLY WITH ALL REQUIREMENTS AS SHOWN ON THE SITE PLANS DATE AUGUST 31, 2018 AND AS FURTHER REVISED BY THE PLANNING BOARD.

REQUESTED WAIVERS FROM PLANNING BOARD REGULATIONS:

WAIVER:		REQUIRED:	PROPOSED:
SECTION 6.0 DESIGN STANDARDS			FGLKJ
6.1.1.	DESIGN SPEEDS:	DESIGN SPEED FOR STREETS SHALL BE 30 MPH	MINIMUM DESIGN SPEED IS 15 MPH – MINIMUM STOPPING SIGHT DISTANCE IS 80'
6.1.14.	LONGITUDINAL GRADES:	MAXIMUM GRADE ON CURVES SHALL BE 6%	MAXIMUM GRADE ON CURVES SHALL BE 8%
6.1.16.	INTERSECTION GRADES:	LEVEL AREA AT INTERSECTIONS	3.23% AND 6.63% AT THE PROPOSED INTERNAL INTERSECTION
SECTION 7.0 REQUIRED IMPROVEMENTS			
7.4.1.	CROSS SECTION	TYPICAL CROSS SECTION (APPENDIX A)	PROPOSED CROSS SECTIONS
7.4.3.4.	PREPARATION OF THE ROADWAY	5" CROWN (3.78% CROSS SLOPE)	4" CROWN (3.0% CROSS SLOPE)
7.4.3.7.		6" ASPHALT PAVEMENT SECTION	4" ASPHALT PAVEMENT SECTION
7.4.4.2.	MONUMENTS, CURBING AND RETAINING WALLS	VERTICAL GRANITE CURB ON BOTH SIDES OF ROADWAY	12" WIDE CAPE COD BERM ON ROADWAY & SLOPED GRANITE CURB AT ENTRANCE
7.4.5.1.	SIDEWALKS	SIDEWALK ON BOTH SIDES OF ROADWAY	ONE SIDEWALK FROM ENTRANCE TO DCR TRAIL ENTRANCE
7.4.5.2.		SIDEWALK CROSS SLOPE = 3/8" PER FOOT	SIDEWALK CROSS SLOPE = 3.0%
7.4.6.1.	PLANTING SPACE	4'-6" GRASS STRIP BETWEEN CURB AND SIDEWALK	4'-0" GRASS STRIP BETWEEN CURB AND SIDEWALK
7.4.6.2.		8" LOAM AND SEED	6" LOAM AND SEED
7.4.6.3.	STREET TREE PLANTING SPACE/SIZE	STREET TREES MIN 12 FT HEIGHT AND 50 FT SPACING	STREET TREES VARY IN SPACING AND SIZE (8'-12' HEIGHT & 3-3.5" CALIPER)
7.5.2	WATER SYSTEM	MAINS SHALL BE LOCATED 14' OFF THE STREET LINE ON OPPOSITE SIDE OF THE STREET FROM THE DRAINAGE SYSTEM	MAIN LOCATION VARIES AS SHOWN ON PLANS
7.5.3.	HYDRANT LOCATION	HYDRANT LOCATION INTERVAL NOT GREATER THAN 500 FT	HYDRANT LOCATIONS PER FIRE DEPARTMENT
7.5.4.	GATE VALVE LOCATION	GATE VALVE LOCATION INTERVAL NOT GREATER THAN 500 FT	GATE VALVES PROVIDED AT INTERSECTIONS AND TIE INS ONLY
8.2	STORM DRAINAGE – PIPE	PIPE MATERIAL – VC, RCP OR CMP, 3 FT. MINIMUM PIPE COVER	PIPE MATERIAL – HIGH DENSITY POLYETHYLENE (HDPE), 1.5 FT. MINIMUM PIPE COVER
10.4	UTILITIES – STREET LIGHTING	STREET LIGHTING SHALL HAVE A HEIGHT OF 15 FT. OR MORE AS APPROVED BY THE BOARD	STREET LIGHTING SHALL HAVE A HEIGHT OF 10 FT.

GREAT ESTATE PLANNED UNIT DEVELOPMENT DESIGN CRITERIA:

SECTION:	REQUIRED:	PROPOSED:
DIMENSIONAL AND ZONING		
MINIMUM LOT AREA	46 ACRES	47.054 ACRES
MAXIMUM WETLAND AREA	2 ACRES	0.28 ACRES
MINIMUM FRONTAGE	1500 FEET	1632.57 FEET
FRONT YARD SETBACK FOR NEW BUILDINGS IN THE DEVENS HOUSE CLUSTER	250 FEET	283.75 FEET
SIDE YARD SETBACK FOR NEW BUILDINGS	175 FEET	175.47 FEET
REAR YARD SETBACK FOR NEW BUILDINGS	100 FEET	102.05 FEET
NEW ROADWAY SETBACKS FROM SIDE YARD AND EXISTING DRIVEWAY EASEMENT	125 FEET	129.96 FEET
NEW ROADWAY SETBACK FROM REAR YARD	50 FEET	50.91 FEET
HEIGHT (TOWNHOUSE UNITS/EXISTING DWELLINGS)	2 STORIES/EXISTING	2 STORIES/EXISTING
MAXIMUM LIVING AREA PER UNIT	3,600 SF	LESS THAN 3,600 SF
MINIMUM OPEN LAND	60%	60.88%
AFFORDABLE UNITS	10% ROUNDED TO NEXT HIGHEST WHOLE NUMBER	6 UNITS = 11% (OFF SITE)
AVERAGE NUMBER OF BEDROOMS	2.6/UNIT	2.6/UNIT
PARKING SPACES	AS DETERMINED TO BE NECESSARY	108 GARAGE SPACES 108 DRIVEWAY SPACES 8 ON STREET SPACES = 224 TOTAL SPACES

REVISIONS

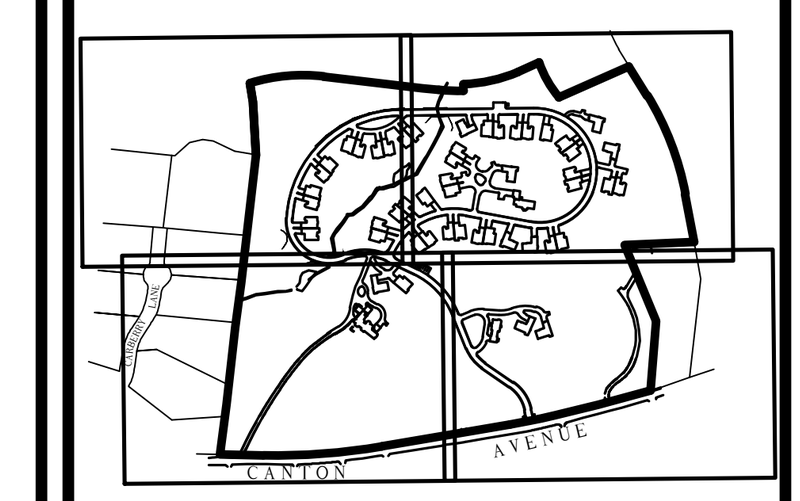

KEY PLAN



DRAWN BY: JG

DESIGNED BY: JG/DWK

CHECKED BY: DWK

Merrill
Engineers and Land Surveyors
427 COLUMBIA ROAD, HANOVER, MA 02339 / T: (781) 826-9200
26 UNION STREET, PLYMOUTH MA 02360 / T: (508) 746-6060
WWW.MERRILLINC.COM

SITE PLAN
WOLCOTT WOODS
MILTON, MASSACHUSETTS

PREPARED FOR: WOLCOTT RESIDENTIAL, LLC
80 BEHARRELL STREET, SUITE E
CONCORD, MASSACHUSETTS 01742

AUGUST 31, 2018

SCALE: AS NOTED

JOB No. 16-079

LATEST REVISION:

GENERAL NOTES, LEGEND, SYMBOLS & ABBREVIATIONS

SHEET C1.2

MA GRID NAD 83

CARBERRY LANE

TO CANTON AVENUE

ASSESSORS PARCEL I.D. No. M-1-6
#10 CARBERRY LANE
N/F RICHARD NG & MARY ELLEN FITZGERALD
DEED BOOK 10713 PAGE 547

ASSESSORS PARCEL I.D. No. M-1-7
#8 CARBERRY LANE
N/F MARY M. WOODS
DEED BOOK 14453 PAGE 254

ASSESSORS PARCEL I.D. No. M-1-8
#6 CARBERRY LANE
N/F MATTHEW T. & SHEILA H. HIATT
DEED BOOK 16441 PAGE 514

ASSESSORS PARCEL I.D. No. M-1-9
#4 CARBERRY LANE
N/F JOHN S. MCPHEE
DEED BOOK 28339 PAGE 121

ASSESSORS PARCEL I.D. No. M-1-5
CANTON AVENUE
N/F WEEKS REALTY TRUST U/D/T
DEED BOOK 25725 PAGE 279

20.00' WIDE UTILITY EASEMENT (SEE PLAN No. 1359 OF 1987 PLAN BOOK 361 - APPROXIMATE LOCATION)

20.00' DRAINAGE EASEMENT (SEE PLAN No. 1359 OF 1987 PLAN BOOK 361 - APPROXIMATE LOCATION)

LIMIT OF BORDERING VEGETATED WETLAND (TYP.)

LIMIT OF INLAND BANK TO AN INTERMITTENT STREAM (TYP.)

MATCH LINE

ASSESSORS
PARCEL I.D. No. M-2-29
#1672 CANTON AVENUE
N/F WOLCOTT RESIDENTIAL, LLC
DEED BOOK 34179 PAGE 470
758,229 S.F. OR 17.41 ACRES

ASSESSORS
PARCEL I.D. No. M-2-29A
(NO ADDRESS ASSIGNED)
N/F WOLCOTT RESIDENTIAL, LLC
DEED BOOK 34179 PAGE 473
80,172 S.F. OR 1.84 ACRES

ASSESSORS
PARCEL I.D. No. M-2-4
(NO ADDRESS ASSIGNED)
N/F CARBERRY FAMILY LIMITED PARTNERSHIP
DEED BOOK 32060 PAGE 328
174,671 S.F. OR 4.01 ACRES

BOSTON EDISON UTILITY EASEMENT
(SEE DEED BOOK 4601 PAGE 329 & PLAN No. 486 OF 1969 PLAN BOOK 4601 PAGE 3)

CANTON ~ PUBLIC - VARIABLE WIDTH ~ AVENUE

BENCHMARK
TOP OF HYDRANT ARROW
EL=177.62 N.A.V.D.

SCALE IN FEET

COPYRIGHT © BY MERRILL CORPORATION
NO PART OF THIS DOCUMENT MAY BE REPRODUCED, STORED IN A RETRIEVAL SYSTEM, OR TRANSMITTED IN ANY FORM OR BY ANY MEANS, ELECTRONIC, MECHANICAL, PHOTOCOPYING, RECORDING OR OTHERWISE, WITHOUT THE EXPRESS WRITTEN CONSENT OF MERRILL CORPORATION WITH THE EXCEPTION OF ANY REGULATORY AUTHORITY WHICH MAY REPRODUCE IT IN CONJUNCTION WITH THE PERFORMANCE OF OFFICIAL BUSINESS UNDER ITS JURISDICTION. ANY MODIFICATIONS MADE TO THIS DOCUMENT WITHOUT THE EXPRESS WRITTEN CONSENT OF MERRILL CORPORATION SHALL RENDER IT UNUSABLE.

REVISIONS

KEY PLAN

COMMONWEALTH OF MASSACHUSETTS
SHANE M. BRENNER
No. 45917
REGISTERED PROFESSIONAL LAND SURVEYOR

DRAWN BY: JG

DESIGNED BY: JG/DWK

CHECKED BY: DWK

Merrill
Engineers and Land Surveyors
427 COLUMBIA ROAD, HANOVER, MA 02339 / T: (781) 826-9200
26 UNION STREET, PLYMOUTH MA 02360 / T: (508) 746-6060
WWW.MERRILLINC.COM

SITE PLAN

WOLCOTT WOODS
MILTON, MASSACHUSETTS

PREPARED FOR: WOLCOTT RESIDENTIAL, LLC
80 BEHARRELL STREET, SUITE E
CONCORD, MASSACHUSETTS 01742

AUGUST 31, 2018

SCALE: 1" = 40'

JOB No. 16-079

LATEST REVISION:

EXISTING CONDITIONS PLAN

SHEET C2.1

COPYRIGHT © BY MERRILL CORPORATION
ALL RIGHTS RESERVED. NO PART OF THIS PHOTOGRAPH MAY BE REPRODUCED IN A RETRIEVAL SYSTEM, OR TRANSMITTED IN ANY FORM OR BY ANY MEANS, ELECTRONIC, MECHANICAL, PHOTOCOPYING, RECORDING OR OTHERWISE, WITHOUT THE EXPRESS WRITTEN CONSENT OF MERRILL CORPORATION WITH THE EXCEPTION OF ANY REGULATORY AUTHORITY WHICH MAY REPRODUCE IT IN CONJUNCTION WITH THE PERFORMANCE OF OFFICIAL BUSINESS UNDER ITS JURISDICTION. ANY MISREPRESENTATIONS MADE TO THE DOCUMENT WITHOUT THE EXPRESS WRITTEN CONSENT OF MERRILL CORPORATION SHALL RENDER IT VOIDABLE.

REVISIONS

KEY PLAN

SHANE M. BRENNER No. 45917 REGISTERED PROFESSIONAL LAND SURVEYOR COMMONWEALTH OF MASSACHUSETTS

DRAWN BY: JG

DESIGNED BY: JG/DWK

CHECKED BY: DWK

Merrill
Engineers and Land Surveyors
427 COLUMBIA ROAD, HANOVER, MA 02339 / T: (781) 826-9200
26 UNION STREET, PLYMOUTH MA 02360 / T: (508) 746-6060
WWW.MERRILLINC.COM

SITE PLAN

WOLCOTT WOODS
MILTON, MASSACHUSETTS

PREPARED FOR: WOLCOTT RESIDENTIAL, LLC
80 BEHARRELL STREET, SUITE E
CONCORD, MASSACHUSETTS 01742

AUGUST 31, 2018

SCALE: 1" = 40'

JOB No. 16-079

LATEST REVISION:

EXISTING CONDITIONS PLAN

SHEET C2.2

MA. GRID NAD 83

ASSESSORS PARCEL I.D. No. M-10-DCR
N/F DEPARTMENT OF CONSERVATION
AND RECREATION
DEED BOOK 10586 PAGE 145

R=672.11'
L=278.16'
S52°58'31"W
PROPERTY LINE (TYP.)
372.11'
432.25'
S51°35'40"E
71.03'
EXISTING PATH
MATCH LINE
C2.3
C2.4

ASSESSORS PARCEL I.D. No. M-10-DCR
HILLSIDE DRIVE
N/F DEPARTMENT OF CONSERVATION
AND RECREATION

197.91'
S47°13'14"E
WIRE FENCE
EXISTING PATH

ASSESSORS
PARCEL I.D. No. M-2-29
#1672 CANTON AVENUE
N/F WOLCOTT RESIDENTIAL, LLC
DEED BOOK 34179 PAGE 470
758,229 S.F. OR 17.41 ACRES

100' BUFFER TO WETLAND RESOURCE AREA

WFA6
WFA5
WFA4
WFA3
WFA2
WFA1
WFA7
WFA8
WFA9
WFA1-1
WFA1-2
25' NO DISTURBANCE ZONE
LIMIT OF BORDERING VEGETATED WETLAND (TYP.)
UPLAND WETLAND

IBB17
IBB18
IBB19
IBB20
IBB21
IBB22
IBB23
IBB24
IBB25
IBB26
IBB27
IBB28
IBB29
IBB100
IB512
IB511
IB510
IB509
IB508
IB507
IB506
IB505
IB504
IB503
IB502
IB501
IB500

LIMIT OF INLAND BANK TO AN INTERMITTENT STREAM (TYP.)
25' NO DISTURBANCE ZONE

GRAVEL PATH
BRIDGE
SRW
DRIVEWAY
DECK
#1672 EXISTING DWELLING
EXISTING SHED
EXISTING BARN
EXISTING GARAGE
EXISTING GREENHOUSE
PAVED DRIVEWAY
GAZEBO
EXISTING STONEWALL
EXISTING TREE LINE
EXISTING CONTOURS
EXISTING SPOT GRADES
EXISTING UTILITY POLE
EXISTING CATCH BASIN
EXISTING DRAIN MANHOLE
EXISTING SEWER MANHOLE
EXISTING GAS GATE
EXISTING GAS VALVE
EXISTING WATER GATE
EXISTING WATER VALVE
EXISTING HYDRANT
EXISTING SIGN
EXISTING LIGHT
EXISTING TELEPHONE MANHOLE
EXISTING ELECTRIC MANHOLE
EXISTING ELECTRIC HANDHOLE
EXISTING TELEPHONE HANDHOLE
EXISTING CABLE TV HANDHOLE
EXISTING GAS MARKER
EXISTING WATER MARKER
EXISTING TELEPHONE MARKER
EXISTING ELECTRIC MARKER
EXISTING CABLE TV MARKER
EXISTING GAS MANHOLE
EXISTING WATER MANHOLE
EXISTING TELEPHONE MANHOLE
EXISTING ELECTRIC MANHOLE
EXISTING CABLE TV MANHOLE
EXISTING GAS HANDHOLE
EXISTING WATER HANDHOLE
EXISTING TELEPHONE HANDHOLE
EXISTING ELECTRIC

ASSESSORS PARCEL I.D. No. M-10-DCR
N/F DEPARTMENT OF CONSERVATION
AND RECREATION
DEED BOOK 10586 PAGE 145

MA GRID MAD 83

METAL GATE

EXISTING FENCE

POST & RAIL FENCE

IBB1 IB523 IBB2 IB522 IBB3 IB521 IBB4 IB520 IBB5 IB519 IBB6 IB518 IBB7 IB517 IBB8 IBB9 IB516 IBB10 IB515 IBB11 IBB12 IB514 IBB14 IB513 IBB15 IBB16 IB512

EXISTING STONEWALL

40.00' WIDE RIGHT OF WAY SHOWN AS PARCEL 2 ON PLAN No. 272 OF 1935 PLAN BOOK 119

S52°58'31"W 372.11'

432.25'

60.14'

S37°01'29"E 25.01'

R=606.67' L=93.55'

R=581.67

L=300.00' NON-TANGENT CURVE

S21°27'30"W 86.69'

CHB=N71°19'51"W CHD=150.73' R=400.00' L=151.64'

PROPERTY LINE (TYP.)

286.35'

S22°20'43"W

N75°07'16"W 129.70'

R=1083.52'

L=356.69'

N24°23'54"W 181.48'

S45°51'37"E 25.00'

86.02'

135.0'

123.8'

157.4'

127.2'

RIPRAP

FENCE POSTS

SHED

EXISTING BUILDING

EXISTING BUILDING

WELL (STONE COVER)

EXISTING DWELLING

SHED F.F. EL.=270.0

PAVED DRIVEWAY

EXISTING GARAGE

CONCRETE

PROPANE TANKS

SCREENED PORCH

OVERHEAD WIRES ATTACHED TO TREE

CO (REFER TO WETLAND REPORT)

SMH EL.=267.96

ASSESSORS
PARCEL I.D. No. M-2-40
#1726 CANTON AVENUE
N/F CARBERRY FAMILY LIMITED PARTNERSHIP
DEED BOOK 32225 PAGE 48
790,184 S.F. OR 18.14 ACRES

ASSESSORS PARCEL I.D. No. M-10-DCR
N/F DEPARTMENT OF CONSERVATION
AND RECREATION
DEED BOOK 10586 PAGE 145

MATCH LINE

WIRE FENCE

220.47'

GUY

UP

EXISTING CONDOMINIUM

100' NON-DISTURBANCE ZONE

WETLAND

100' BUFFER ZONE

10F EL.=267.96

SMH (RIM) E=249.81 I=246.11

S37°12'29"E 68.11'

S37°12'29"E

193.2'

4" PVC

SMH (RIM) E=251.50 (6") I=250.10 (4") I=249.00

SMH E=249.66

125.5'

25' NON-DISTURBANCE ZONE

CONCRETE RETAINING WALL

SMH EL.=256.92

11726 EXISTING DWELLING

EM

6' STOCKADE FENCE

UPLAND WETLAND

WFA1 WFA2 WFA3 WFA4 WFA5 WFA6 WFA7 WFA8 WFA9

LIMIT OF INLAND BANK TO AN INTERMITTENT STREAM (TYP.)

BRIDGE FRAME (STEEL BEAMS)

LIMIT OF BORDERING VEGETATED WETLAND (TYP.)

BOSTON EDISON UTILITY EASEMENT (SEE DEED BOOK 4601 PAGE 329 & PLAN No. 486 OF 1969 PLAN BOOK 4601 PAGE 3)

S37°21'39"E 144.30'

EXISTING STONEWALL

S37°21'39"E 92.46'

122.1'

45.3'

S37°51'57"E 48.49'

8'

S55°12'31"W

POST & RAIL FENCE

212.29'

WIRE FENCE

WELL (W)

TP#5

C2.1 C2.4 C2.2

BENCHMARK
TOP OF HYDRANT SPINDLE
EL=262.20 N.A.V.D.

HYD

MB4

SMH EL.=255.56

CONC.

EXISTING GARAGE

PROPANE TANK

VALVE

BRICK

CO

GRAVEL AREA

SHED F.F. EL.=259.4

EXISTING DWELLING

SCREEN PORCH

EM

SHED F.F. EL.=259.58

GRAVEL DRIVE

GRAVEL AREA

FLAG POLE

SMH E=252.59

SMH E=252.15

6" PVC

6" HDPE (2) I=247.21 I=247.42

214.5'

214.5'

PAVED DRIVEWAY

6' STOCKADE FENCE

BRICK

EXISTING STONEWALL

GRAVEL DRIVE

PAVED DRIVEWAY

MATCH LINE

258.63'

N43°56'41"E

POST & RAIL FENCE

EOP

C2.4 C2.2

40 0 40 80 120

SCALE IN FEET

COPYRIGHT © BY MERRILL CORPORATION
ALL RIGHTS RESERVED. THIS DOCUMENT IS NOT TO BE REPRODUCED IN A RETRIEVAL SYSTEM, OR TRANSMITTED IN ANY FORM OR BY ANY MEANS, ELECTRONIC, MECHANICAL, PHOTOCOPYING, RECORDING OR OTHERWISE, WITHOUT THE EXPRESS WRITTEN CONSENT OF MERRILL CORPORATION WITH THE EXCEPTION THAT PERMISSION IS HEREBY GRANTED TO GOVERNMENTAL AGENCIES FOR REVIEW AND APPROVAL PURPOSES. ANY UNAUTHORIZED REPRODUCTION OF ANY REGULATORY AUTHORITY APPROVED PLAN, OR PORTION THEREOF, IS AT THE SOLE RISK OF THE PARTY MAKING SUCH REPRODUCTION AND WITHOUT LIABILITY TO MERRILL CORPORATION. ANY UNAUTHORIZED ALTERATION OF THIS PLAN WITHOUT THE EXPRESS WRITTEN CONSENT OF MERRILL CORPORATION SHALL RENDER IT UNUSABLE.

REVISIONS

KEY PLAN

COMMONWEALTH OF MASSACHUSETTS
SHANE M. BRENNER
No. 45917
REGISTERED PROFESSIONAL LAND SURVEYOR

DRAWN BY: JG

DESIGNED BY: JG/DWK

CHECKED BY: DWK

Merrill
Engineers and Land Surveyors
427 COLUMBIA ROAD, HANOVER, MA 02339 / T: (781) 826-9200
26 UNION STREET, PLYMOUTH MA 02360 / T: (508) 746-6060
WWW.MERRILLINC.COM

SITE PLAN
WOLCOTT WOODS
MILTON, MASSACHUSETTS

PREPARED FOR: WOLCOTT RESIDENTIAL, LLC
80 BEHARRELL STREET, SUITE E
CONCORD, MASSACHUSETTS 01742

AUGUST 31, 2018

SCALE: 1" = 40'

JOB No. 16-079

LATEST REVISION:

EXISTING CONDITIONS PLAN

SHEET C2.4

MA GRID NAD 83

MATCH LINE

C3.3
C3.1

20.00' WIDE UTILITY EASEMENT (SEE PLAN No. 1359 OF 1987 PLAN BOOK 361 – APPROXIMATE LOCATION)

20.00' DRAINAGE EASEMENT (SEE PLAN No. 1359 OF 1987 PLAN BOOK 361 – APPROXIMATE LOCATION)

CARBERRY LANE

#26 EXISTING BUILDING (APPROXIMATE)

#24 EXISTING BUILDING (APPROXIMATE)

#22 EXISTING BUILDING (APPROXIMATE)

#168 EXISTING BUILDING (APPROXIMATE)

LIMIT OF BORDERING VEGETATED WETLAND (TYP.)

WETLAND UPLAND

50' WETLAND BUFFER ZONE

REMOVE EXIST. TENNIS COURT (REFER TO LANDSCAPE PLAN FOR PROP. PLANTINGS)

LIMIT OF INLAND BANK TO AN INTERMITTENT STREAM (TYP.)

175' BUILDING SETBACK

125' ROADWAY SETBACK

550' BUILDING SETBACK

Esker Woods

PROP. GARAGE ADDITION (REFER TO ARCHITECTURAL PLANS)

PROP. MODULAR BLOCK RETAINING WALL

PROP. STONE RETAINING WALL TO MATCH EXIST. WALL

RETAIN EXIST. STONE RETAINING WALL

PROP. STREET LIGHT (TYP.)

PROP. 22' WIDE BIT. CONC. ROADWAY WITH 1' WIDE CAPE COD BERM (CCB)

PROP. WOOD GUARDRAIL (TYP.)

REPAVE EXIST. BIT. CONC. DRIVEWAY

WOLCOTT WOODS LN

PROP. MAIL STATION WITH 4 PARKING SPACES (9'x18' EACH SPACE)

PROP. 4'-6" BIT. CONC. SIDEWALK (TYP.)

Bldg #4

Bldg #3

PROP. WOOD FRAME SINGLE FAMILY HOME (REFER TO ARCHITECTURAL PLANS FOR DETAILS) (TYP.)

PROP. BIT CONC DRIVEWAY (TYP.)

PROP. STONE LANDSCAPE RETAINING WALL (REFER TO LANDSCAPE PLANS)(TYP.)

PROP. 22' WIDE BIT. CONC. ROADWAY WITH 1' WIDE CAPE COD BERM (CCB)

REMOVE EXIST. POOL AND SURROUNDING BACK PATIO AREA. PROP. LANDSCAPING (REFER TO LANDSCAPE PLANS FOR DETAIL)

PROP. SPLIT RAIL FENCE (REFER TO LANDSCAPE PLANS) (TYP.)

Manor House

PROP. GARAGE ADDITION (REFER TO ARCHITECTURAL PLANS)

PROP. SUBSURFACE INFILTRATION SYSTEM

RESTORE EXIST. DWELLING AND SURROUNDING LANDSCAPING (REFER TO ARCHITECTURAL AND LANDSCAPE PLANS FOR DETAILS)

551.46'

MAINTAIN EXIST. DRIVE AS EMERGENCY ACCESS, REPAVE AS NEEDED

House Manor Lawn

Devens Meadow

250' BUILDING SETBACK

PROP. TREELINE (TYP.)

PROP. SUBSURFACE INFILTRATION SYSTEM

EXIST. NATURAL BASIN AREA

EXIST. NATURAL BASIN AREA

75' NO DISTURBANCE ZONE

PROP. 4' WIDE CRUSHED STONE WALKING PATH, INSTALL AT GRADE AND LOCATION TO AVOID EXISTING TREES

PROP. EMERGENCY ACCESS GATE

CANTON AVENUE

BENCHMARK
TOP OF HYDRANT ARROW
EL=177.62 N.A.V.D.

#170 EXISTING BUILDING (APPROXIMATE)

#170B EXISTING BUILDING (APPROXIMATE)

40 0 40 80 120
SCALE IN FEET

COPYRIGHT © BY MERRILL CORPORATION
NO PART OF THIS DOCUMENT MAY BE REPRODUCED, STORED IN A RETRIEVAL SYSTEM, OR TRANSMITTED IN ANY FORM OR BY ANY MEANS, ELECTRONIC, MECHANICAL, PHOTOCOPYING, RECORDING OR OTHERWISE, WITHOUT THE EXPRESS WRITTEN CONSENT OF MERRILL CORPORATION WITH THE EXCEPTION OF ANY REGULATORY AUTHORITY WHICH MAY REPRODUCE IT IN CONJUNCTION WITH THE PERFORMANCE OF OFFICIAL BUSINESS UNDER ITS JURISDICTION. ANY MODIFICATIONS MADE TO THIS DOCUMENT WITHOUT THE EXPRESS WRITTEN CONSENT OF MERRILL CORPORATION SHALL RENDER IT UNUSABLE.

REVISIONS

KEY PLAN

COMMONWEALTH OF MASSACHUSETTS
DEBORAH W. KELLER
CIVIL
No. 45874
REGISTERED PROFESSIONAL ENGINEER

DRAWN BY: JG

DESIGNED BY: JG/DWK

CHECKED BY: DWK

Merrill
Engineers and Land Surveyors
427 COLUMBIA ROAD, HANOVER, MA 02339 / T: (781) 826-9200
26 UNION STREET, PLYMOUTH MA 02360 / T: (508) 746-6060
WWW.MERRILLINC.COM

SITE PLAN
WOLCOTT WOODS
MILTON, MASSACHUSETTS

PREPARED FOR: WOLCOTT RESIDENTIAL, LLC
80 BEHARRELL STREET, SUITE E
CONCORD, MASSACHUSETTS 01742

AUGUST 31, 2018

SCALE: 1" = 40'

JOB No. 16-079

LATEST REVISION:

SITE LAYOUT PLAN

SHEET C3.1

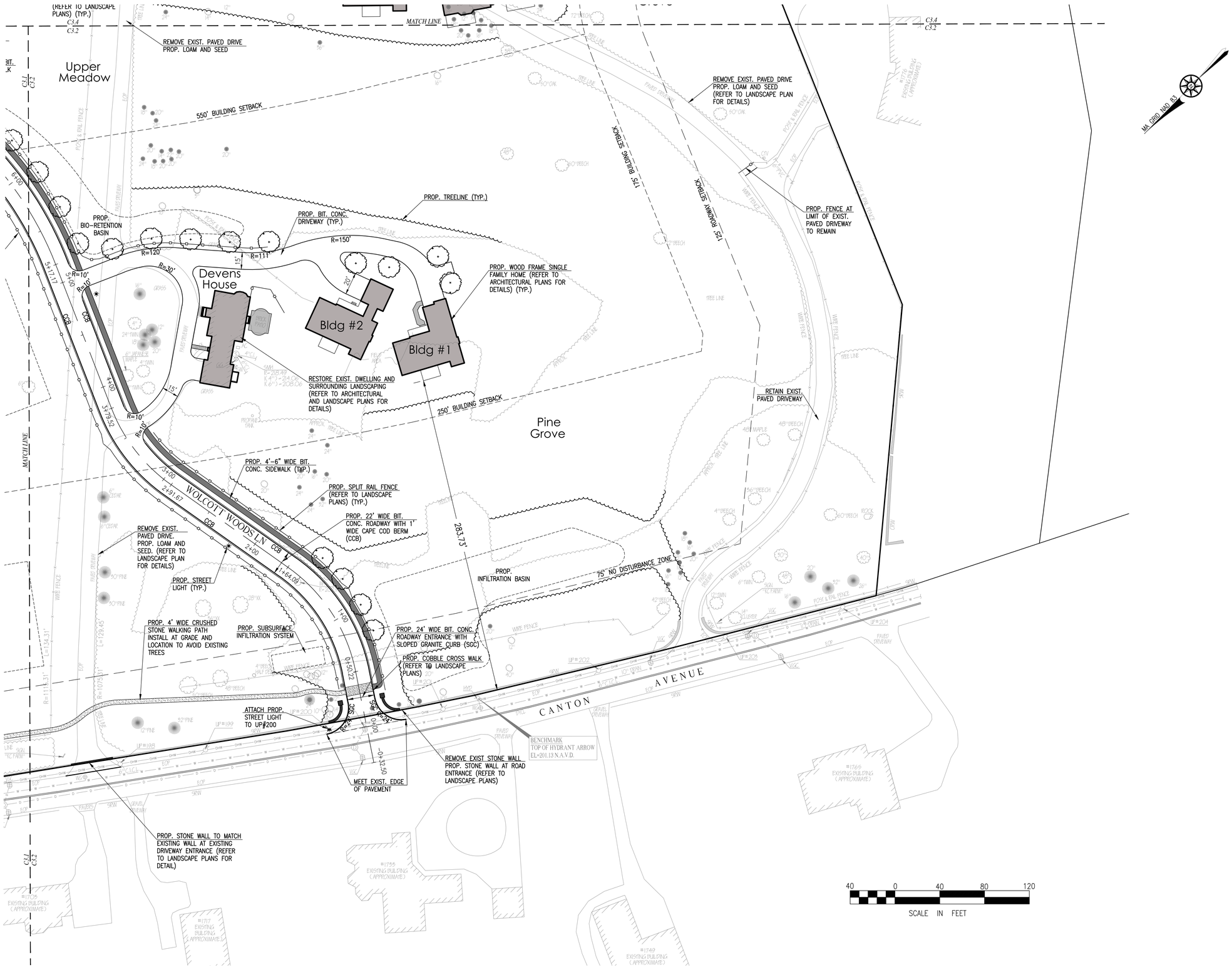

COPYRIGHT © BY MERRILL CORPORATION
NO PART OF THIS DOCUMENT MAY BE REPRODUCED, STORED IN A RETRIEVAL SYSTEM, OR TRANSMITTED IN ANY FORM OR BY ANY MEANS, ELECTRONIC, MECHANICAL, PHOTOCOPYING, RECORDING OR OTHERWISE, WITHOUT THE EXPRESS WRITTEN CONSENT OF MERRILL CORPORATION WITH THE EXCEPTION OF ANY REGULATORY AUTHORITY WHICH MAY REPRODUCE IT IN CONJUNCTION WITH THE PERFORMANCE OF OFFICIAL BUSINESS UNDER ITS JURISDICTION. ANY MODIFICATIONS MADE TO THIS DOCUMENT WITHOUT THE EXPRESS WRITTEN CONSENT OF MERRILL CORPORATION SHALL RENDER IT UNUSABLE.

REVISIONS

KEY PLAN

COMMONWEALTH OF MASSACHUSETTS
DEBORAH W. KELLER
CIVIL
No. 45874
REGISTERED PROFESSIONAL ENGINEER

DRAWN BY: JG

DESIGNED BY: JG/DWK

CHECKED BY: DWK

Merrill
Engineers and Land Surveyors
427 COLUMBIA ROAD, HANOVER, MA 02339 / T: (781) 826-9200
26 UNION STREET, PLYMOUTH MA 02360 / T: (508) 746-6060
WWW.MERRILLINC.COM

SITE PLAN
WOLCOTT WOODS
MILTON, MASSACHUSETTS

PREPARED FOR: WOLCOTT RESIDENTIAL, LLC
80 BEHARRELL STREET, SUITE E
CONCORD, MASSACHUSETTS 01742

AUGUST 31, 2018

SCALE: 1" = 40'

JOB No. 16-079

LATEST REVISION:

SITE LAYOUT PLAN

SHEET C3.2



COPYRIGHT © BY MERRILL CORPORATION
NO PART OF THIS DOCUMENT MAY BE REPRODUCED, STORED IN A RETRIEVAL SYSTEM, OR TRANSMITTED IN ANY FORM OR BY ANY MEANS, ELECTRONIC, MECHANICAL, PHOTOCOPYING, RECORDING OR OTHERWISE, WITHOUT THE EXPRESS WRITTEN CONSENT OF MERRILL CORPORATION WITH THE EXCEPTION OF ANY REGULATORY AUTHORITY WHICH MAY REPRODUCE IT IN CONJUNCTION WITH THE PERFORMANCE OF OFFICIAL BUSINESS UNDER ITS JURISDICTION. ANY MODIFICATIONS MADE TO THIS DOCUMENT WITHOUT THE EXPRESS WRITTEN CONSENT OF MERRILL CORPORATION SHALL RENDER IT UNUSABLE.

REVISIONS

KEY PLAN

COMMONWEALTH OF MASSACHUSETTS
DEBORAH W. KELLER
CIVIL
No. 45874
REGISTERED PROFESSIONAL ENGINEER

DRAWN BY: JG

DESIGNED BY: JG/DWK

CHECKED BY: DWK

Merrill
Engineers and Land Surveyors
427 COLUMBIA ROAD, HANOVER, MA 02339 / T: (781) 826-9200
26 UNION STREET, PLYMOUTH MA 02360 / T: (508) 746-6060
WWW.MERRILLINC.COM

SITE PLAN
WOLCOTT WOODS
MILTON, MASSACHUSETTS

PREPARED FOR: WOLCOTT RESIDENTIAL, LLC
80 BEHARRELL STREET, SUITE E
CONCORD, MASSACHUSETTS 01742

AUGUST 31, 2018

SCALE: 1" = 40'

JOB No. 16-079

LATEST REVISION:

SITE LAYOUT PLAN

SHEET C3.3

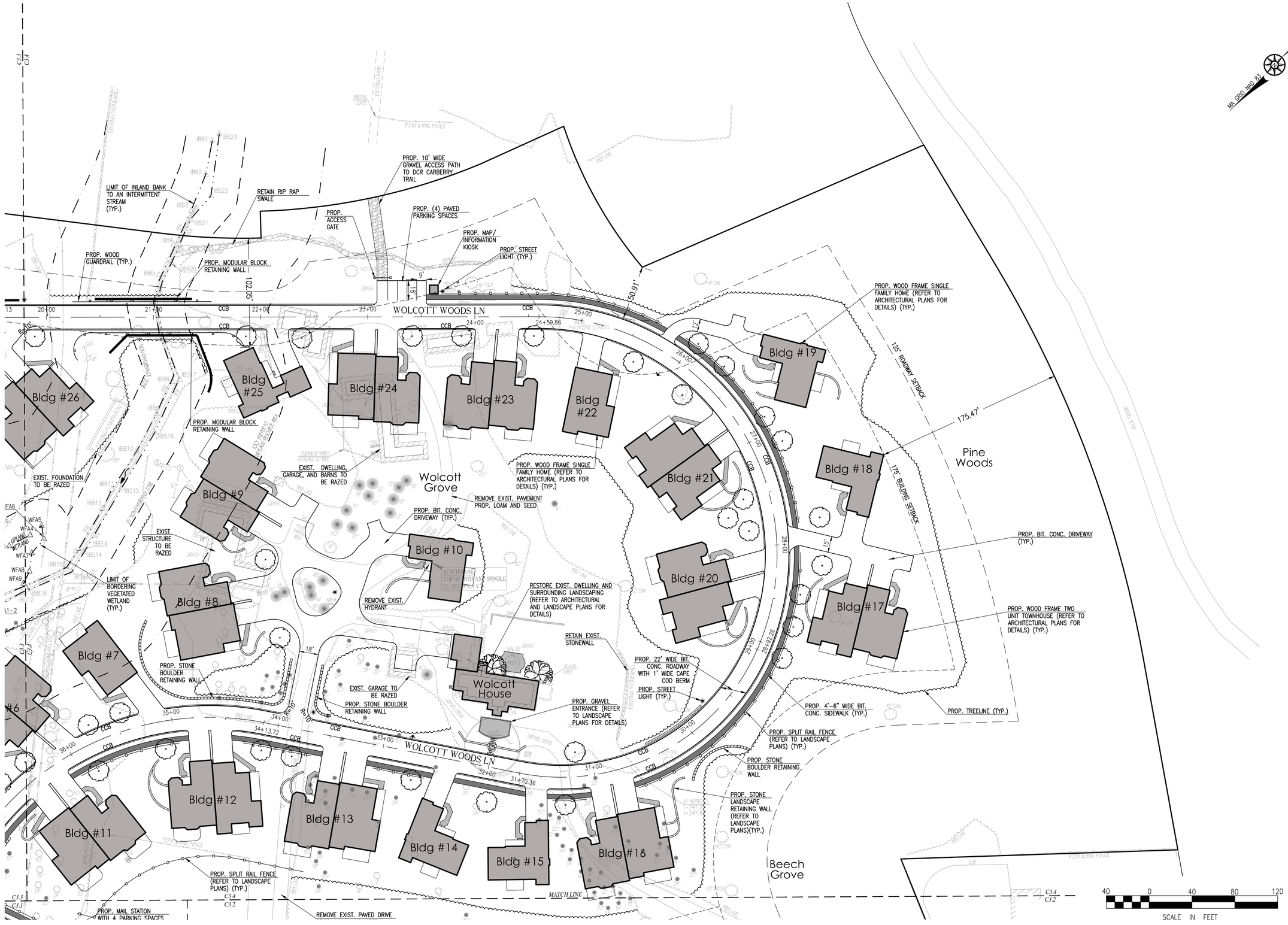

COPYRIGHT © BY MERRILL CORPORATION
NO PART OF THIS DOCUMENT MAY BE REPRODUCED, STORED IN A RETRIEVAL SYSTEM, OR TRANSMITTED IN ANY FORM OR BY ANY MEANS, ELECTRONIC, MECHANICAL, PHOTOCOPYING, RECORDING OR OTHERWISE, WITHOUT THE EXPRESS WRITTEN CONSENT OF MERRILL CORPORATION WITH THE EXCEPTION OF REPRODUCTIONS MADE TO THIS DOCUMENT BY THE CITY OF MILTON, MASSACHUSETTS FOR USE IN THE PERMITTING PROCESS. ANY MODIFICATIONS MADE TO THIS DOCUMENT WITHOUT THE EXPRESS WRITTEN CONSENT OF MERRILL CORPORATION SHALL RENDER IT UNUSABLE.

REVISIONS

KEY PLAN

COMMONWEALTH OF MASSACHUSETTS
DEBORAH W. KELLER
CIVIL
No. 45874
REGISTERED PROFESSIONAL ENGINEER

DRAWN BY: JG

DESIGNED BY: JG/DWK

CHECKED BY: DWK

Merrill
Engineers and Land Surveyors
427 COLUMBIA ROAD, HANOVER, MA 02339 / T: (781) 826-9200
26 UNION STREET, PLYMOUTH MA 02360 / T: (508) 746-6060
WWW.MERRILLINC.COM

SITE PLAN
WOLCOTT WOODS
MILTON, MASSACHUSETTS

PREPARED FOR: WOLCOTT RESIDENTIAL, LLC
80 BEHARRELL STREET, SUITE E
CONCORD, MASSACHUSETTS 01742

AUGUST 31, 2018

SCALE: 1" = 40'

JOB No. 16-079

LATEST REVISION:

SITE LAYOUT PLAN

SHEET C3.4

MA GRID NAD 83

MATCH LINE

CARBERRY LANE

20.00' WIDE UTILITY EASEMENT (SEE PLAN No. 1359 OF 1987 PLAN BOOK 361 – APPROXIMATE LOCATION)

20.00' DRAINAGE EASEMENT (SEE PLAN No. 1359 OF 1987 PLAN BOOK 361 – APPROXIMATE LOCATION)

LIMIT OF BORDERING VEGETATED WETLAND (TYP.)

FARM POND (POND 2P)

MAINTAIN EXIST. FARM POND OUTLET CONTROL WEIR

LIMIT OF INLAND BANK TO AN INTERMITTENT STREAM (TYP.)

REMOVE EXIST. 30" RCP CULVERT
PROP. 38 LF – 4'X4' PRECAST CONC. BOX CULVERT
INV (IN) = 200.39
INV (OUT) = 198.47
PROP. 15" HDPE OUTLET
INV=200.25
WITH RIPRAP PAD

Esker Woods

House Manor Lawn

Devens Meadow

MANOR HOUSE

BLDG #4
GAR=219.0
FF=220.0
BS=210.0

BLDG #3
GAR=219.0
FF=221.0
BS=211.0

PROP DMH5
RIM=218.8
INV(IN)=210.91 (DMH6)
INV(IN)=213.41 (POND 5P)
INV(OUT)=210.00

PROP SUBSURFACE INFILTRATION CHAMBER SYSTEM (POND 6P)

PROP DMH
RIM=214.5
12" ORIFICE=209.50
RECT. WEIR=212.00
INV (IN)=209.50
INV(OUT)=206.00

120 LF – 24" HDPE

PROP DMH
RIM=201.5
12" ORIFICE=197.00
RECT. WEIR=199.00
INV (IN)=197.00
INV (OUT)=197.00

PROP DMH
RIM=204.8
INV(IN)=200.00
INV(OUT)=197.00

PROP. TREELINE (TYP.)

PROP FLARED END SECTION (FES-1) WITH RIPRAP PAD
INV=196.60
20 LF – 24" HDPE

PROP SUBSURFACE INFILTRATION CHAMBER SYSTEM (POND 7P)

EXIST. NATURAL BASIN AREA (POND 3P)

EXIST. NATURAL BASIN AREA (POND 4P)

APPROXIMATE TEST PIT LOCATION (TYP.)

BENCHMARK
TOP OF HYDRANT ARROW
EL=177.62 N.A.V.D.

CANTON AVENUE

SCALE IN FEET
40 0 40 80 120

COPYRIGHT © BY MERRILL CORPORATION
NO PART OF THIS DOCUMENT MAY BE REPRODUCED, STORED IN A RETRIEVAL SYSTEM, OR TRANSMITTED IN ANY FORM OR BY ANY MEANS, ELECTRONIC, MECHANICAL, PHOTOCOPYING, RECORDING OR OTHERWISE, WITHOUT THE EXPRESS WRITTEN CONSENT OF MERRILL CORPORATION WITH THE EXCEPTION OF ANY REGULATORY AUTHORITY WHICH MAY REPRODUCE IT IN CONJUNCTION WITH THE PERFORMANCE OF OFFICIAL BUSINESS UNDER ITS JURISDICTION. ANY MODIFICATIONS MADE TO THIS DOCUMENT WITHOUT THE EXPRESS WRITTEN CONSENT OF MERRILL CORPORATION SHALL RENDER IT UNUSABLE.

REVISIONS

KEY PLAN

COMMONWEALTH OF MASSACHUSETTS
DEBORAH W. KELLER
CIVIL
No. 45874
REGISTERED PROFESSIONAL ENGINEER

DRAWN BY: JG

DESIGNED BY: JG/DWK

CHECKED BY: DWK

Merrill
Engineers and Land Surveyors
427 COLUMBIA ROAD, HANOVER, MA 02339 / T: (781) 826-9200
26 UNION STREET, PLYMOUTH MA 02360 / T: (508) 746-6060
WWW.MERRILLINC.COM

SITE PLAN
WOLCOTT WOODS
MILTON, MASSACHUSETTS

PREPARED FOR: WOLCOTT RESIDENTIAL, LLC
80 BEHARRELL STREET, SUITE E
CONCORD, MASSACHUSETTS 01742

AUGUST 31, 2018

SCALE: 1" = 40'

JOB No. 16-079

LATEST REVISION:

GRADING & DRAINAGE PLAN

SHEET C4.1

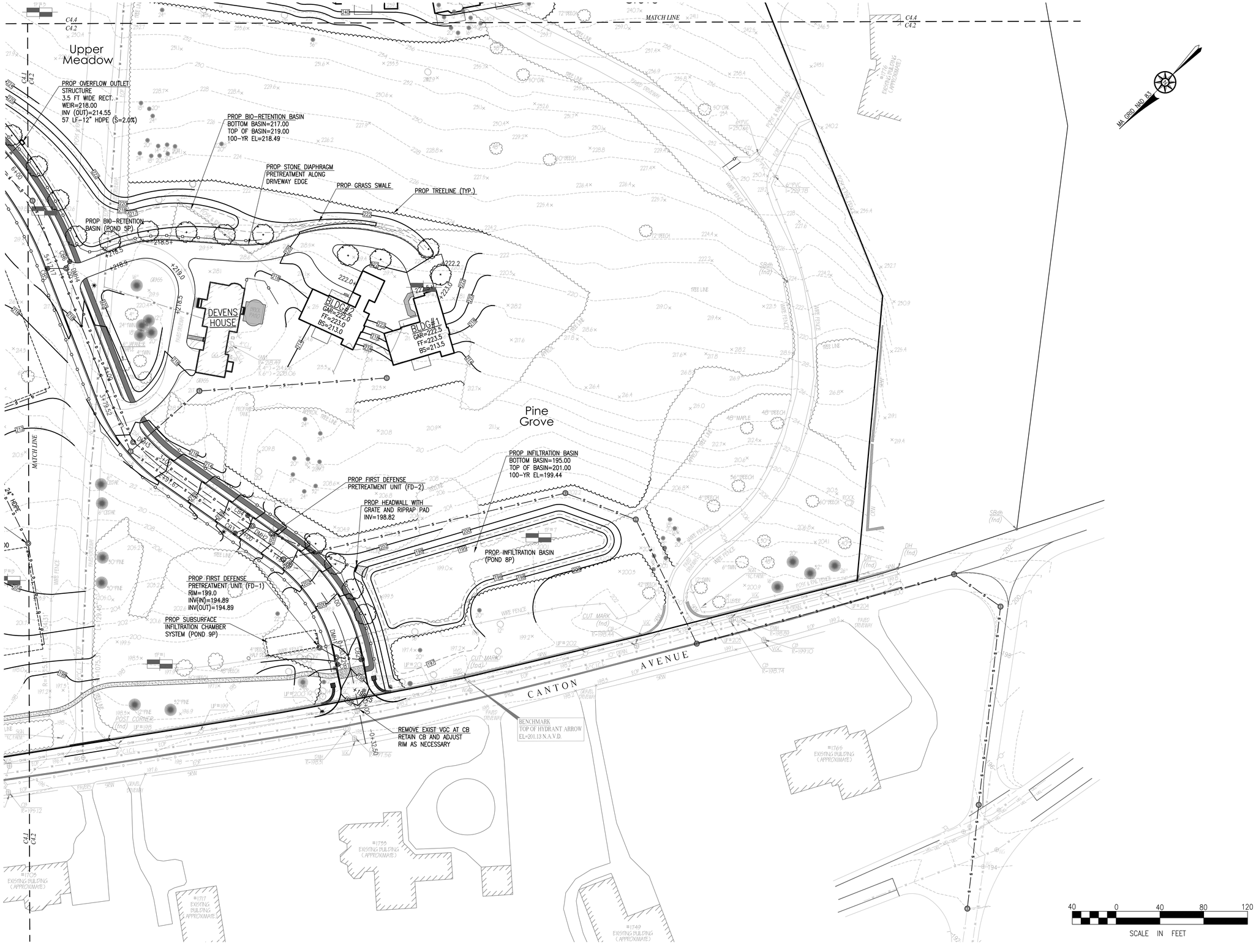

COPYRIGHT © BY MERRILL CORPORATION
NO PART OF THIS DOCUMENT MAY BE REPRODUCED, STORED IN A RETRIEVAL SYSTEM, OR TRANSMITTED IN ANY FORM OR BY ANY MEANS, ELECTRONIC, MECHANICAL, PHOTOCOPYING, RECORDING, OR OTHERWISE, WITHOUT THE PRIOR WRITTEN PERMISSION OF MERRILL CORPORATION. YOU MAY NOT USE, COPY, REPRODUCE, OR TRANSMIT ANY PORTION OF THIS DOCUMENT IN CONNECTION WITH THE PERFORMANCE OF OPTICAL BUSINESS UNDER ITS JURISDICTION, OF ANY REGULATORY AUTHORITY WHICH MAY REPRODUCE IT IN CONJUNCTION WITH THE PERFORMANCE OF OPTICAL BUSINESS UNDER ITS JURISDICTION. ANY MODIFICATIONS MADE TO THIS DOCUMENT WITHOUT THE EXPRESS WRITTEN CONSENT OF MERRILL CORPORATION SHALL RENDER IT UNUSABLE.

REVISIONS

KEY PLAN

COMMONWEALTH OF MASSACHUSETTS
DEBORAH W. KELLIER
CIVIL
No. 45874
REGISTERED PROFESSIONAL ENGINEER

DRAWN BY: JG

DESIGNED BY: JG/DWK

CHECKED BY: DWK

Merrill
Engineers and Land Surveyors
427 COLUMBIA ROAD, HANOVER, MA 02339 / T: (781) 826-9200
26 UNION STREET, PLYMOUTH MA 02360 / T: (508) 746-6060
WWW.MERRILLINC.COM

SITE PLAN
WOLCOTT WOODS
MILTON, MASSACHUSETTS

PREPARED FOR: WOLCOTT RESIDENTIAL, LLC
80 BEHARRELL STREET, SUITE E
CONCORD, MASSACHUSETTS 01742

AUGUST 31, 2018

SCALE: 1" = 40'

JOB No. 16-079

LATEST REVISION:

GRADING & DRAINAGE PLAN

SHEET C4.2

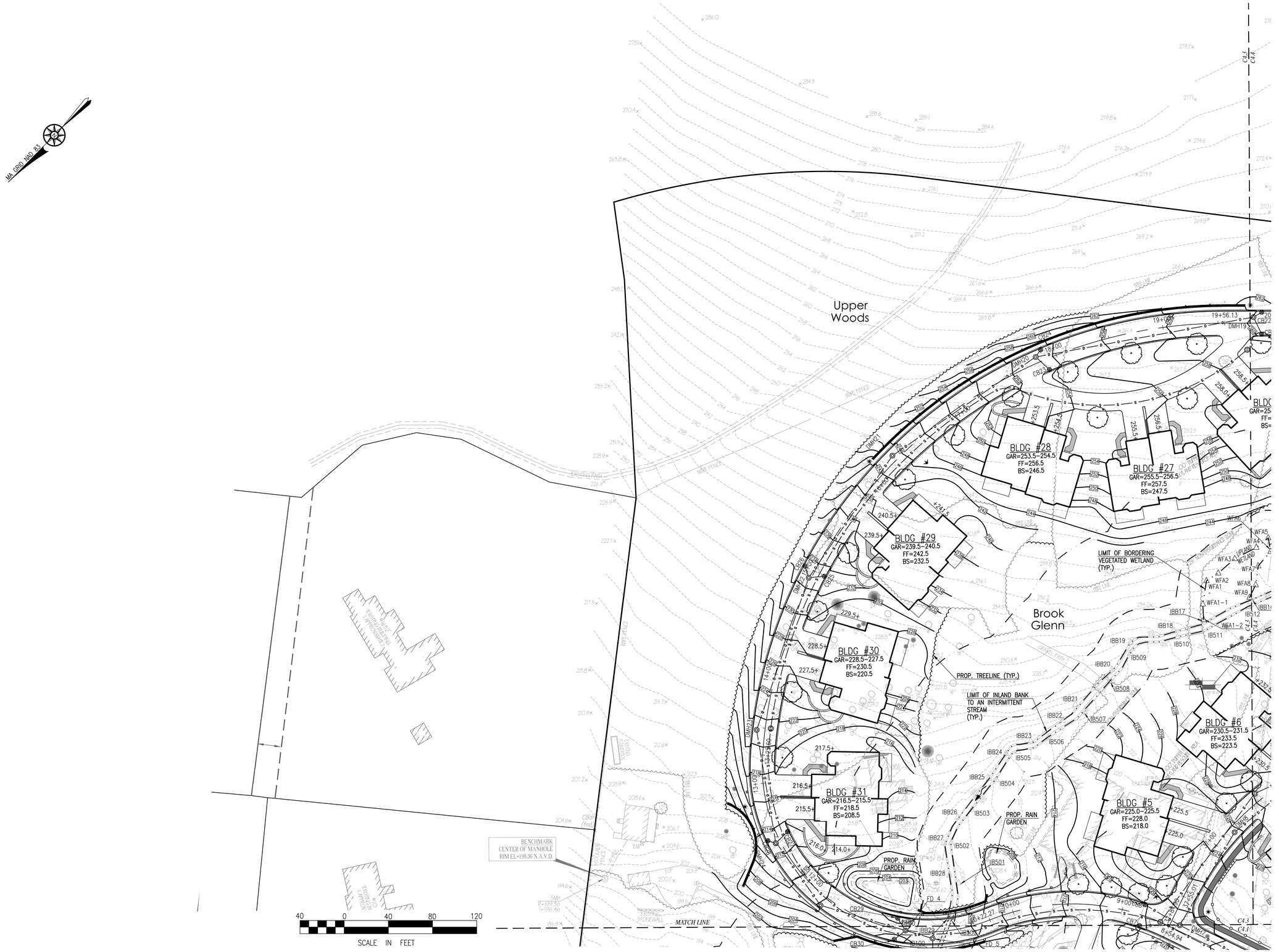

COPYRIGHT © BY MERRILL CORPORATION
NO PART OF THIS DOCUMENT MAY BE REPRODUCED, STORED IN A RETRIEVAL SYSTEM, OR TRANSMITTED IN ANY FORM OR BY ANY MEANS, ELECTRONIC, MECHANICAL, PHOTOCOPYING, RECORDING, OR OTHERWISE, WITHOUT THE EXPRESS WRITTEN CONSENT OF MERRILL CORPORATION EXCEPT AS REQUIRED BY LAW OR THE RULES OF ANY REGULATORY AUTHORITY WHICH MAY REPRODUCE IT IN CONJUNCTION WITH THE PERFORMANCE OF OFFICIAL BUSINESS UNDER ITS JURISDICTION. ANY MODIFICATIONS MADE TO THIS DOCUMENT WITHOUT THE EXPRESS WRITTEN CONSENT OF MERRILL CORPORATION SHALL RENDER IT UNUSABLE.

REVISIONS

KEY PLAN

COMMONWEALTH OF MASSACHUSETTS
DEBORAH W. KELLER
CIVIL
No. 45874
REGISTERED PROFESSIONAL ENGINEER

DRAWN BY: JG

DESIGNED BY: JG/DWK

CHECKED BY: DWK

Merrill
Engineers and Land Surveyors
427 COLUMBIA ROAD, HANOVER, MA 02339 / T: (781) 826-9200
26 UNION STREET, PLYMOUTH MA 02360 / T: (508) 746-6060
WWW.MERRILLINC.COM

SITE PLAN
WOLCOTT WOODS
MILTON, MASSACHUSETTS

PREPARED FOR: WOLCOTT RESIDENTIAL, LLC
80 BEHARRELL STREET, SUITE E
CONCORD, MASSACHUSETTS 01742

AUGUST 31, 2018

SCALE: 1" = 40'

JOB No. 16-079

LATEST REVISION:

GRADING & DRAINAGE PLAN

SHEET C4.3

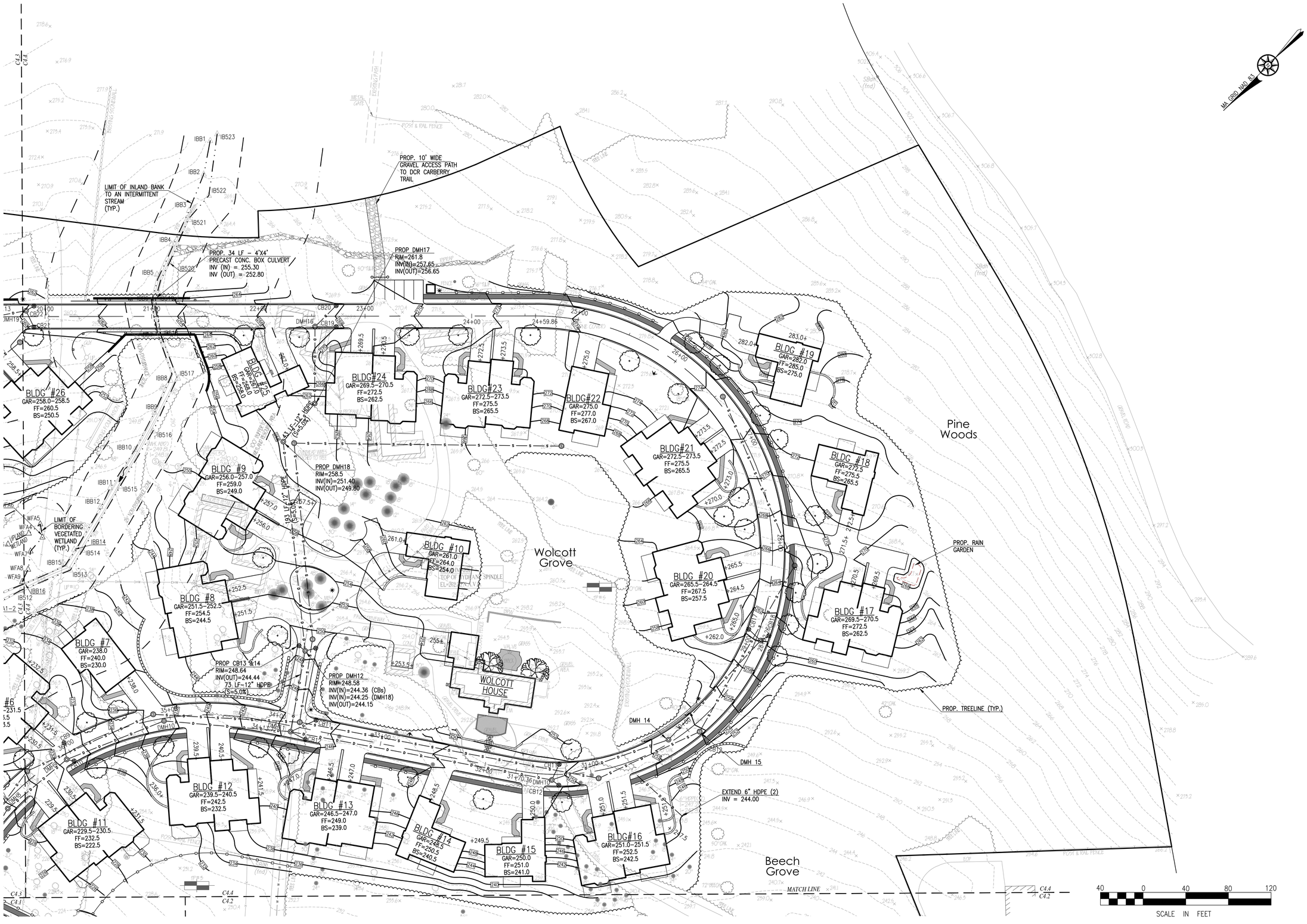

COPYRIGHT © BY MERRILL CORPORATION
NO PART OF THIS DOCUMENT MAY BE REPRODUCED, STORED IN A RETRIEVAL SYSTEM, OR TRANSMITTED IN ANY FORM OR BY ANY MEANS, ELECTRONIC, MECHANICAL, PHOTOCOPYING, RECORDING OR OTHERWISE, WITHOUT THE EXPRESS WRITTEN CONSENT OF MERRILL CORPORATION WITH THE EXCEPTION OF ANY REGULATORY AUTHORITY WHICH MAY REPRODUCE IT IN CONJUNCTION WITH THE PERFORMANCE OF OFFICIAL BUSINESS UNDER ITS JURISDICTION. ANY MODIFICATIONS MADE TO THIS DOCUMENT WITHOUT THE EXPRESS WRITTEN CONSENT OF MERRILL CORPORATION SHALL RENDER IT UNUSABLE.

REVISIONS

KEY PLAN

COMMONWEALTH OF MASSACHUSETTS
DEBORAH W. KELLER
CIVIL
No. 45874
REGISTERED PROFESSIONAL ENGINEER

DRAWN BY: JG

DESIGNED BY: JG/DWK

CHECKED BY: DWK

Merrill
Engineers and Land Surveyors
427 COLUMBIA ROAD, HANOVER, MA 02339 / T: (781) 826-9200
26 UNION STREET, PLYMOUTH MA 02360 / T: (508) 746-6060
WWW.MERRILLINC.COM

SITE PLAN
WOLCOTT WOODS
MILTON, MASSACHUSETTS

PREPARED FOR: WOLCOTT RESIDENTIAL, LLC
80 BEHARRELL STREET, SUITE E
CONCORD, MASSACHUSETTS 01742

AUGUST 31, 2018

SCALE: 1" = 40'

JOB No. 16-079

LATEST REVISION:

GRADING & DRAINAGE PLAN

SHEET C4.4

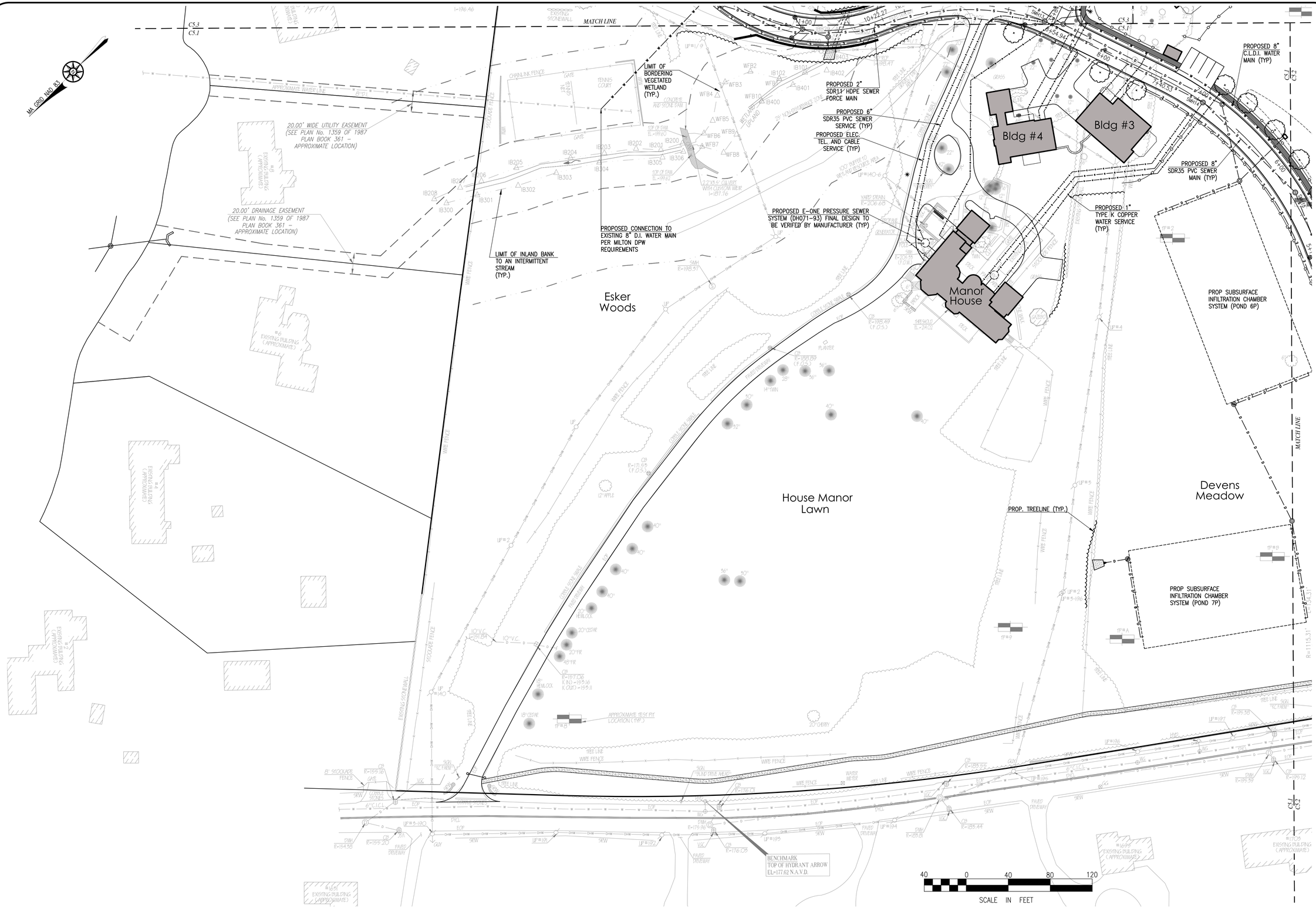

COPYRIGHT © BY MERRILL CORPORATION
NO PART OF THIS DOCUMENT MAY BE REPRODUCED, STORED IN A RETRIEVAL SYSTEM, OR TRANSMITTED IN ANY FORM OR BY ANY MEANS, ELECTRONIC, MECHANICAL, PHOTOCOPYING, RECORDING OR OTHERWISE, WITHOUT THE EXPRESS WRITTEN CONSENT OF MERRILL CORPORATION WITH THE EXCEPTION OF ANY REGULATORY AUTHORITY WHICH MAY REPRODUCE IT IN CONJUNCTION WITH THE PERFORMANCE OF OFFICIAL BUSINESS UNDER ITS JURISDICTION. ANY MODIFICATIONS MADE TO THIS DOCUMENT WITHOUT THE EXPRESS WRITTEN CONSENT OF MERRILL CORPORATION SHALL RENDER IT UNUSABLE.

REVISIONS

KEY PLAN

COMMONWEALTH OF MASSACHUSETTS
DEBORAH W. KELLER
CIVIL
No. 45874
REGISTERED PROFESSIONAL ENGINEER

DRAWN BY: JG

DESIGNED BY: JG/DWK

CHECKED BY: DWK

Merrill
Engineers and Land Surveyors
427 COLUMBIA ROAD, HANOVER, MA 02339 / T: (781) 826-9200
26 UNION STREET, PLYMOUTH MA 02360 / T: (508) 746-6060
WWW.MERRILLINC.COM

SITE PLAN
WOLCOTT WOODS
MILTON, MASSACHUSETTS

PREPARED FOR: WOLCOTT RESIDENTIAL, LLC
80 BEHARRELL STREET, SUITE E
CONCORD, MASSACHUSETTS 01742

AUGUST 31, 2018

SCALE: 1" = 40'

JOB No. 16-079

LATEST REVISION:

UTILITY PLAN

SHEET C5.1

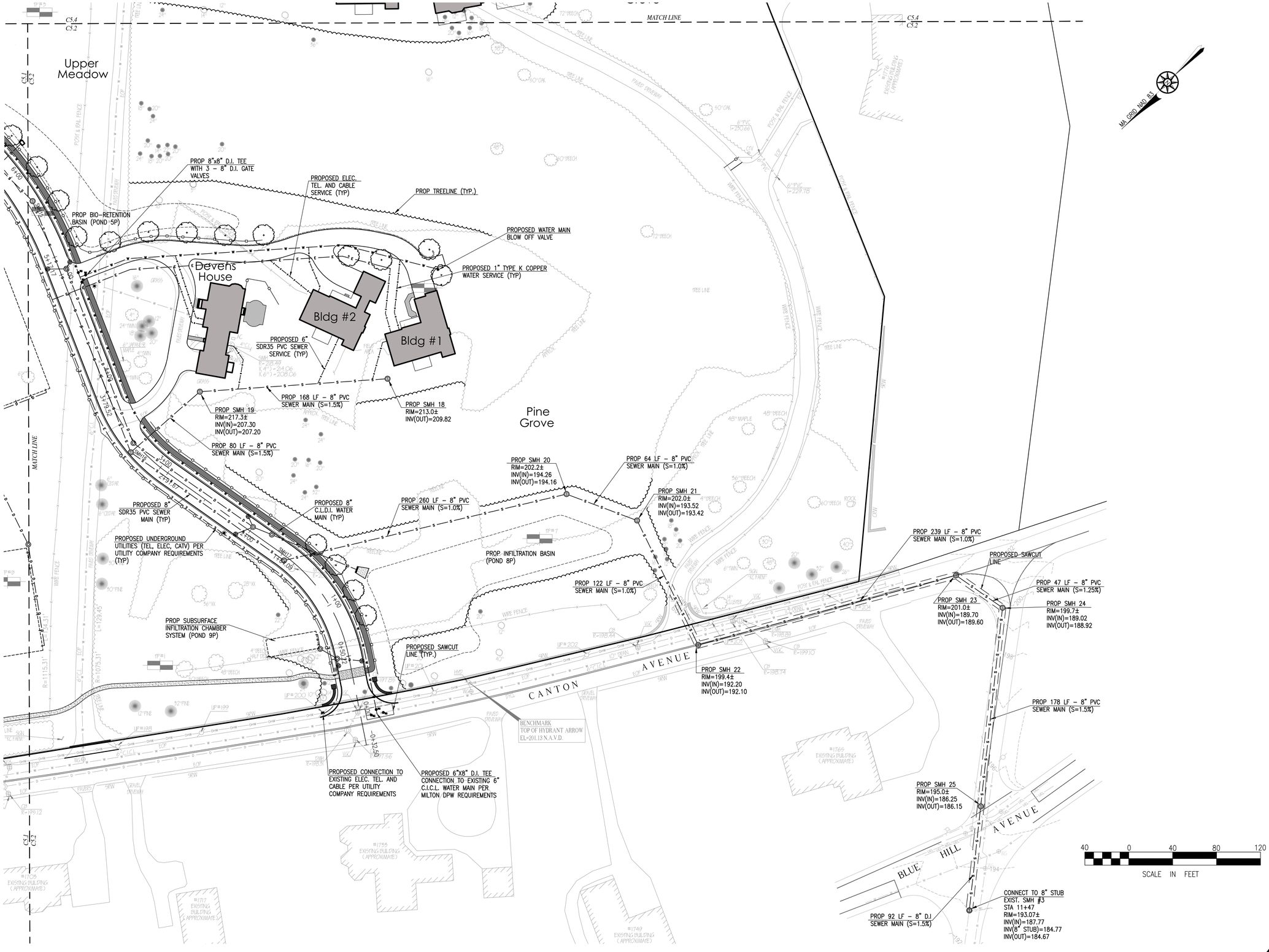

COPYRIGHT © BY MERRILL CORPORATION
NO PART OF THIS DOCUMENT MAY BE REPRODUCED, STORED IN A RETRIEVAL SYSTEM, OR TRANSMITTED IN ANY FORM OR BY ANY MEANS, ELECTRONIC, MECHANICAL, PHOTOCOPYING, RECORDING, OR OTHERWISE, WITHOUT THE EXPRESS WRITTEN CONSENT OF MERRILL CORPORATION WITHIN THE JURISDICTION OF ANY REGULATORY AUTHORITY WHICH MAY REPRODUCE IT IN CONJUNCTION WITH THE PERFORMANCE OF OFFICIAL BUSINESS UNDER ITS JURISDICTION. ANY MODIFICATIONS MADE TO THIS DOCUMENT WITHOUT THE EXPRESS WRITTEN CONSENT OF MERRILL CORPORATION SHALL RENDER IT UNUSABLE.

REVISIONS

KEY PLAN

COMMONWEALTH OF MASSACHUSETTS
DEBORAH W. KELLIER
CIVIL
No. 45874
REGISTERED PROFESSIONAL ENGINEER

DRAWN BY: JG

DESIGNED BY: JG/DWK

CHECKED BY: DWK

Merrill
Engineers and Land Surveyors
427 COLUMBIA ROAD, HANOVER, MA 02339 / T: (781) 826-9200
26 UNION STREET, PLYMOUTH MA 02360 / T: (508) 746-6060
WWW.MERRILLINC.COM

SITE PLAN
WOLCOTT WOODS
MILTON, MASSACHUSETTS

PREPARED FOR: WOLCOTT RESIDENTIAL, LLC
80 BEHARRELL STREET, SUITE E
CONCORD, MASSACHUSETTS 01742

AUGUST 31, 2018

SCALE: 1" = 40'

JOB No. 16-079

LATEST REVISION:

UTILITY PLAN

SHEET C5.2



COPYRIGHT © BY MERRILL CORPORATION
NO PART OF THIS DOCUMENT MAY BE REPRODUCED, STORED IN A RETRIEVAL SYSTEM, OR TRANSMITTED IN ANY FORM OR BY ANY MEANS, ELECTRONIC, MECHANICAL, PHOTOCOPYING, RECORDING OR OTHERWISE, WITHOUT THE EXPRESS WRITTEN CONSENT OF MERRILL CORPORATION WITH THE EXCEPTION OF ANY REGULATORY AUTHORITY WHICH MAY REPRODUCE IT IN CONJUNCTION WITH THE PERFORMANCE OF OFFICIAL BUSINESS UNDER ITS JURISDICTION. ANY MODIFICATIONS MADE TO THIS DOCUMENT WITHOUT THE EXPRESS WRITTEN CONSENT OF MERRILL CORPORATION SHALL RENDER IT UNUSABLE.

REVISIONS

KEY PLAN

COMMONWEALTH OF MASSACHUSETTS
DEBORAH W. KELLER
CIVIL
No. 45874
REGISTERED PROFESSIONAL ENGINEER

DRAWN BY: JG

DESIGNED BY: JG/DWK

CHECKED BY: DWK

Merrill
Engineers and Land Surveyors
427 COLUMBIA ROAD, HANOVER, MA 02339 / T: (781) 826-9200
26 UNION STREET, PLYMOUTH MA 02360 / T: (508) 746-6060
WWW.MERRILLINC.COM

SITE PLAN
WOLCOTT WOODS
MILTON, MASSACHUSETTS

PREPARED FOR: WOLCOTT RESIDENTIAL, LLC
80 BEHARRELL STREET, SUITE E
CONCORD, MASSACHUSETTS 01742

AUGUST 31, 2018

SCALE: 1" = 40'

JOB No. 16-079

LATEST REVISION:

UTILITY PLAN

SHEET C5.3

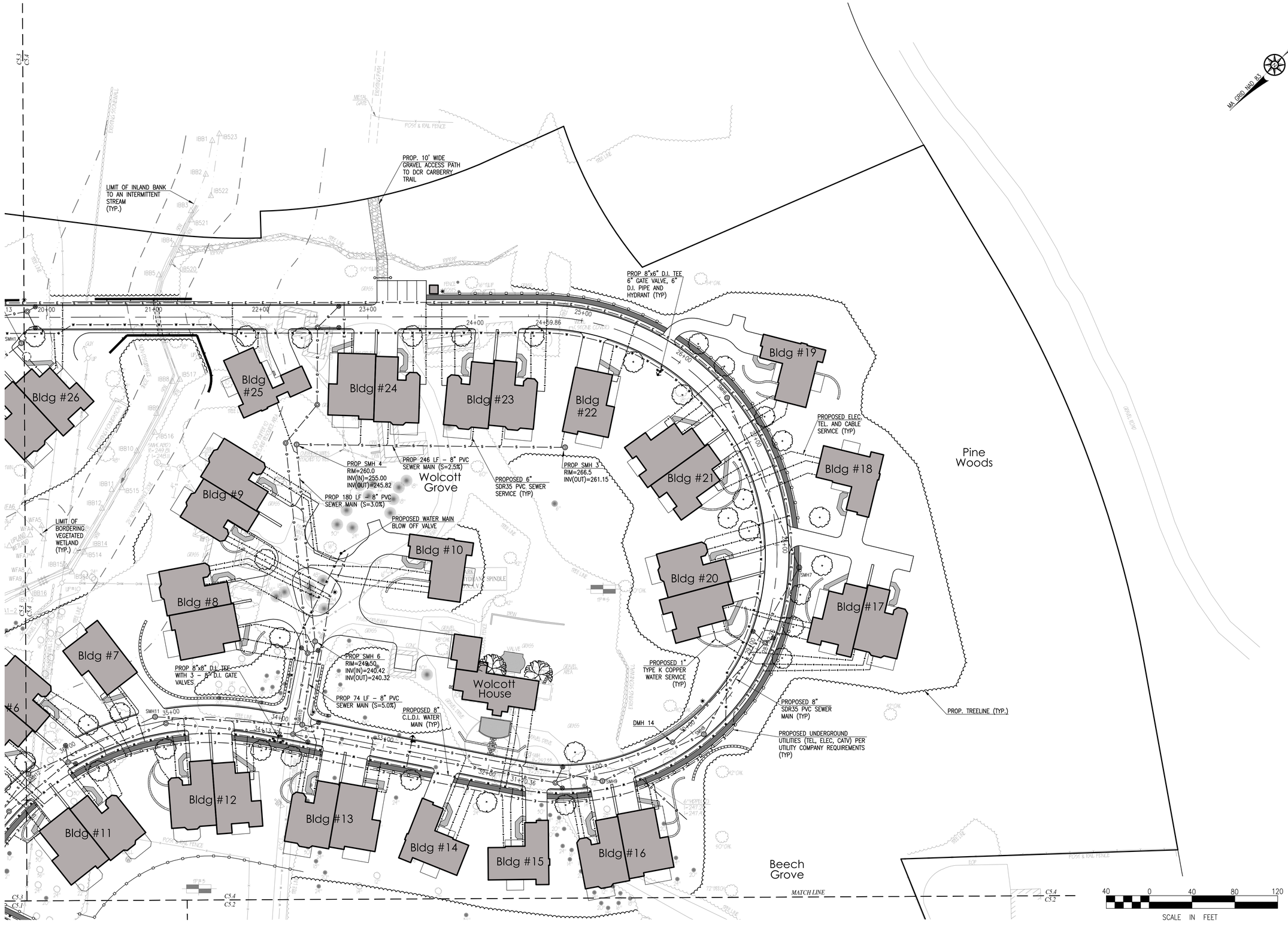

COPYRIGHT © BY MERRILL CORPORATION
NO PART OF THIS DOCUMENT MAY BE REPRODUCED, STORED IN A RETRIEVAL SYSTEM, OR TRANSMITTED IN ANY FORM OR BY ANY MEANS, ELECTRONIC, MECHANICAL, PHOTOCOPYING, RECORDING OR OTHERWISE, WITHOUT THE EXPRESS WRITTEN CONSENT OF MERRILL CORPORATION WITH THE EXCEPTION OF ANY REGULATORY AUTHORITY WHICH MAY REPRODUCE IT IN CONJUNCTION WITH THE PERFORMANCE OF OFFICIAL BUSINESS UNDER ITS JURISDICTION. ANY MODIFICATIONS MADE TO THIS DOCUMENT WITHOUT THE EXPRESS WRITTEN CONSENT OF MERRILL CORPORATION SHALL RENDER IT UNUSABLE.

REVISIONS

KEY PLAN

COMMONWEALTH OF MASSACHUSETTS
DEBORAH W. KELLER
CIVIL
No. 45874
REGISTERED PROFESSIONAL ENGINEER

DRAWN BY: JG

DESIGNED BY: JG/DWK

CHECKED BY: DWK

Merrill
Engineers and Land Surveyors
427 COLUMBIA ROAD, HANOVER, MA 02339 / T: (781) 826-9200
26 UNION STREET, PLYMOUTH MA 02360 / T: (508) 746-6060
WWW.MERRILLINC.COM

SITE PLAN
WOLCOTT WOODS
MILTON, MASSACHUSETTS

PREPARED FOR: WOLCOTT RESIDENTIAL, LLC
80 BEHARRELL STREET, SUITE E
CONCORD, MASSACHUSETTS 01742

AUGUST 31, 2018

SCALE: 1" = 40'

JOB No. 16-079

LATEST REVISION:

UTILITY PLAN

SHEET C5.4

PLAN: WOLCOTT WOODS LANE

SCALE: 1" = 40' HORIZONTAL

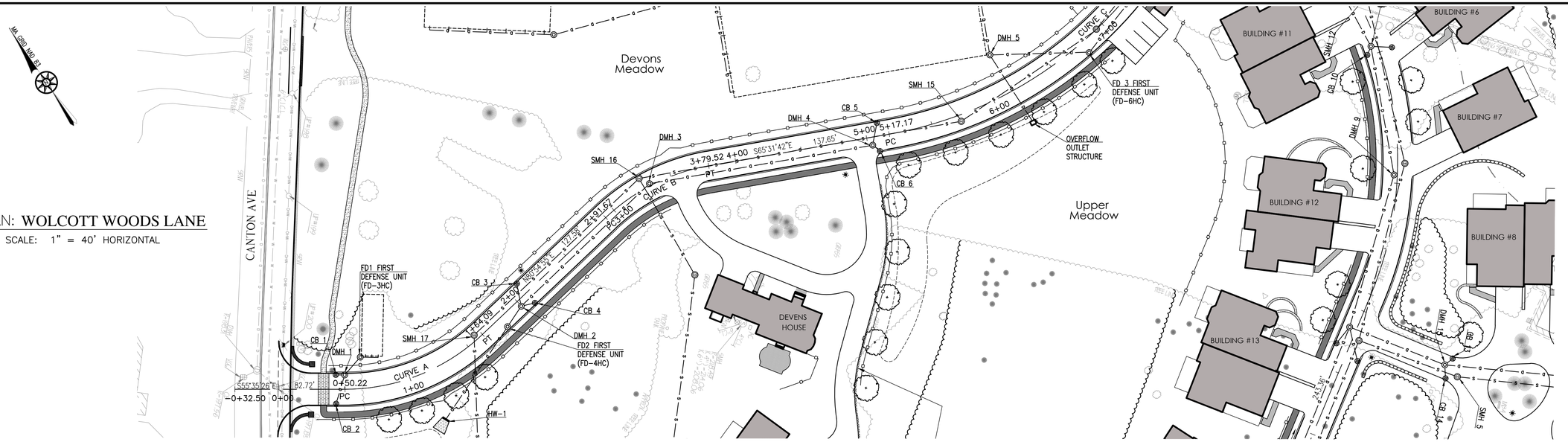

PROFILE: WOLCOTT WOODS LANE

SCALES: 1" = 40' HORIZONTAL
1" = 4' VERTICAL

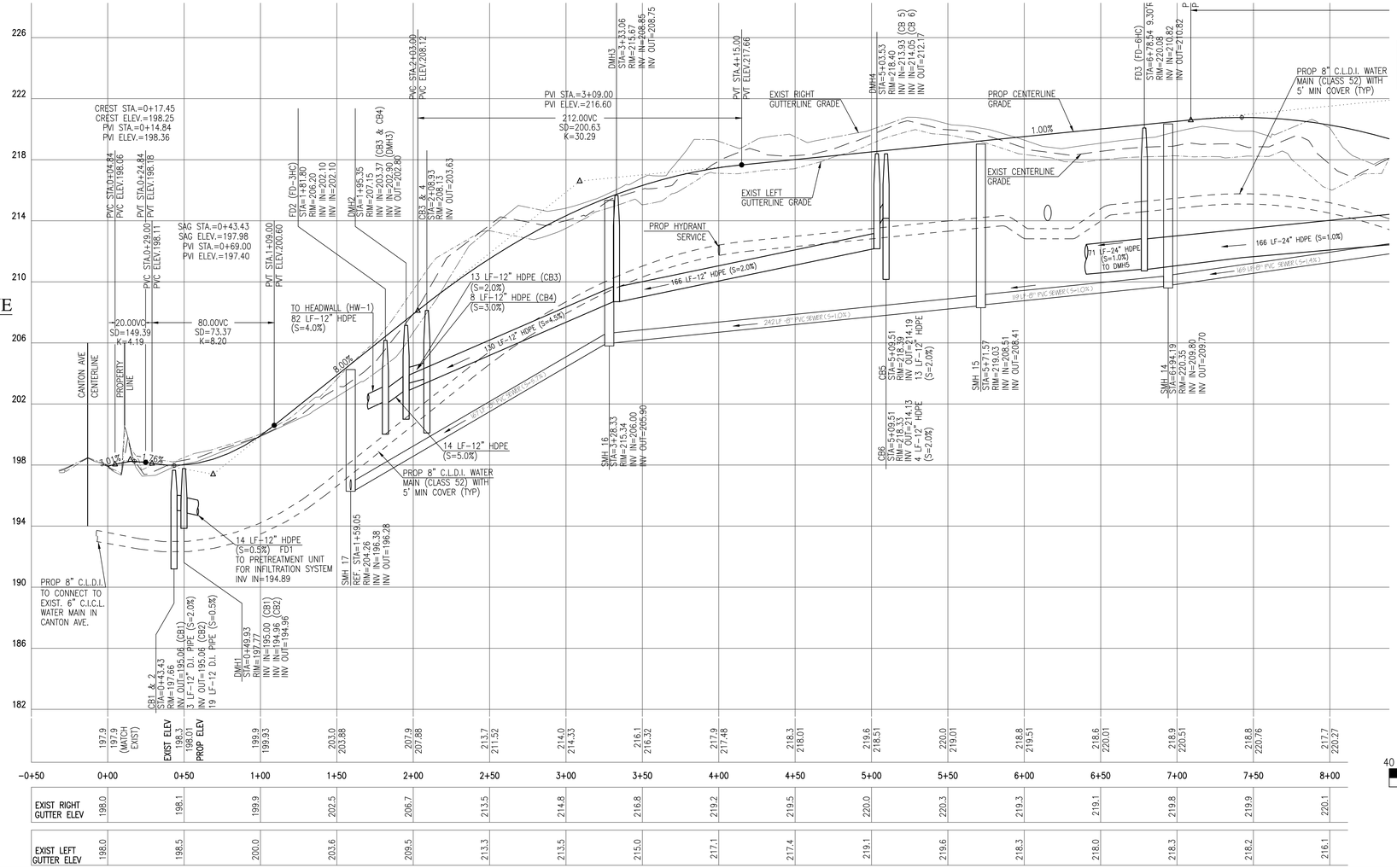

DESC	RADIUS (FT)	LENGTH (FT)	DELTA (DMS)	START STA	END STA
A	150.00	113.87	43°29'39"	0+50.22	1+64.09
B	150.00	87.85	33°33'24"	2+91.67	3+79.52
C	300.00	223.36	42°39'29"	5+17.17	7+40.53

40 0 40 80 120
SCALE IN FEET

COPYRIGHT © BY MERRILL CORPORATION
NO PART OF THIS DOCUMENT MAY BE REPRODUCED, STORED IN A RETRIEVAL SYSTEM, OR TRANSMITTED IN ANY FORM OR BY ANY MEANS, ELECTRONIC, MECHANICAL, PHOTOCOPYING, RECORDING, OR OTHERWISE, EXCEPT AS SPECIFICALLY AUTHORIZED BY MERRILL CORPORATION IN WRITING OR BY THE COPYRIGHT LAWS OF THE COMMONWEALTH OF MASSACHUSETTS AND THE UNITED STATES OF AMERICA. THE LICENSEE IS NOT AUTHORIZED TO ADD OR DELETE ANY INFORMATION TO THE ELECTRONIC FILES, NOR TO REPRODUCE AND/OR DISTRIBUTE THE ELECTRONIC FILES OR ANY PORTION THEREOF, INCLUDING BUT NOT LIMITED TO ANY PROPOSAL OR OTHER DOCUMENT WHICH INCORPORATES ANY PART OF THE ELECTRONIC FILES, TO ANY THIRD PARTY WITHOUT THE PRIOR WRITTEN CONSENT OF MERRILL CORPORATION. MERRILL CORPORATION MAKES NO WARRANTIES, EXPRESS OR IMPLIED, IN CONNECTION WITH THE PERFORMANCE OF OR FAILURE TO PERFORM ANY SERVICES BY MERRILL CORPORATION IN CONNECTION WITH THE ELECTRONIC FILES, INCLUDING BUT NOT LIMITED TO ANY IMPLIED WARRANTIES OF MERCHANTABILITY OR FITNESS FOR A PARTICULAR PURPOSE. MERRILL CORPORATION SHALL NOT BE LIABLE FOR ANY DAMAGES, INCLUDING BUT NOT LIMITED TO DIRECT, INDIRECT, INCIDENTAL, CONSEQUENTIAL OR PUNITIVE DAMAGES, ARISING OUT OF OR IN CONNECTION WITH THE USE OF THE ELECTRONIC FILES. ANY REUSE OF THE ELECTRONIC FILES FOR ANY PURPOSE OTHER THAN THE PROJECT SPECIFIED IN THE CONTRACT DOCUMENTS WILL BE AT THE LICENSEE'S SOLE RISK AND WITHOUT LIABILITY OR LEGAL EXPOSURE TO MERRILL CORPORATION. ANY MODIFICATIONS MADE TO THIS DOCUMENT WITHOUT THE EXPRESS WRITTEN CONSENT OF MERRILL CORPORATION SHALL RENDER IT UNUSABLE.

REVISIONS

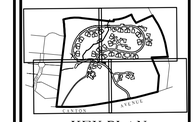

KEY PLAN

COMMONWEALTH OF MASSACHUSETTS
DEBORAH W. KELLER
CIVIL
No. 45874
REGISTERED PROFESSIONAL ENGINEER

DRAWN BY: JG

DESIGNED BY: JG/DWK

CHECKED BY: DWK

Merrill
Engineers and Land Surveyors
427 COLUMBIA ROAD, HANOVER, MA 02339 / T: (781) 826-9200
26 UNION STREET, PLYMOUTH MA 02360 / T: (508) 746-6060
WWW.MERRILLINC.COM

SITE PLAN
WOLCOTT WOODS
MILTON, MASSACHUSETTS

PREPARED FOR: WOLCOTT RESIDENTIAL, LLC
80 BEHARRELL STREET, SUITE E
CONCORD, MASSACHUSETTS 01742

AUGUST 31, 2018

SCALE: 1" = 40'

JOB No. 16-079

LATEST REVISION:

ROADWAY PLAN AND PROFILE

SHEET C6.1

MA GRID NAD 83



DESC	RADIUS (FT)	LENGTH (FT)	DELTA (DMS)	START STA	END STA
D	200.00	167.33	47°56'07"	8+54.94	10+22.27
E	150.00	303.33	115°51'49"	10+22.27	13+25.60
F	420.00	630.53	86°00'58"	13+25.60	19+56.13

PLAN: **WOLCOTT WOODS LANE**

SCALE: 1" = 40' HORIZONTAL

PROFILE: **WOLCOTT WOODS LANE**

SCALES: 1" = 40' HORIZONTAL
1" = 4' VERTICAL

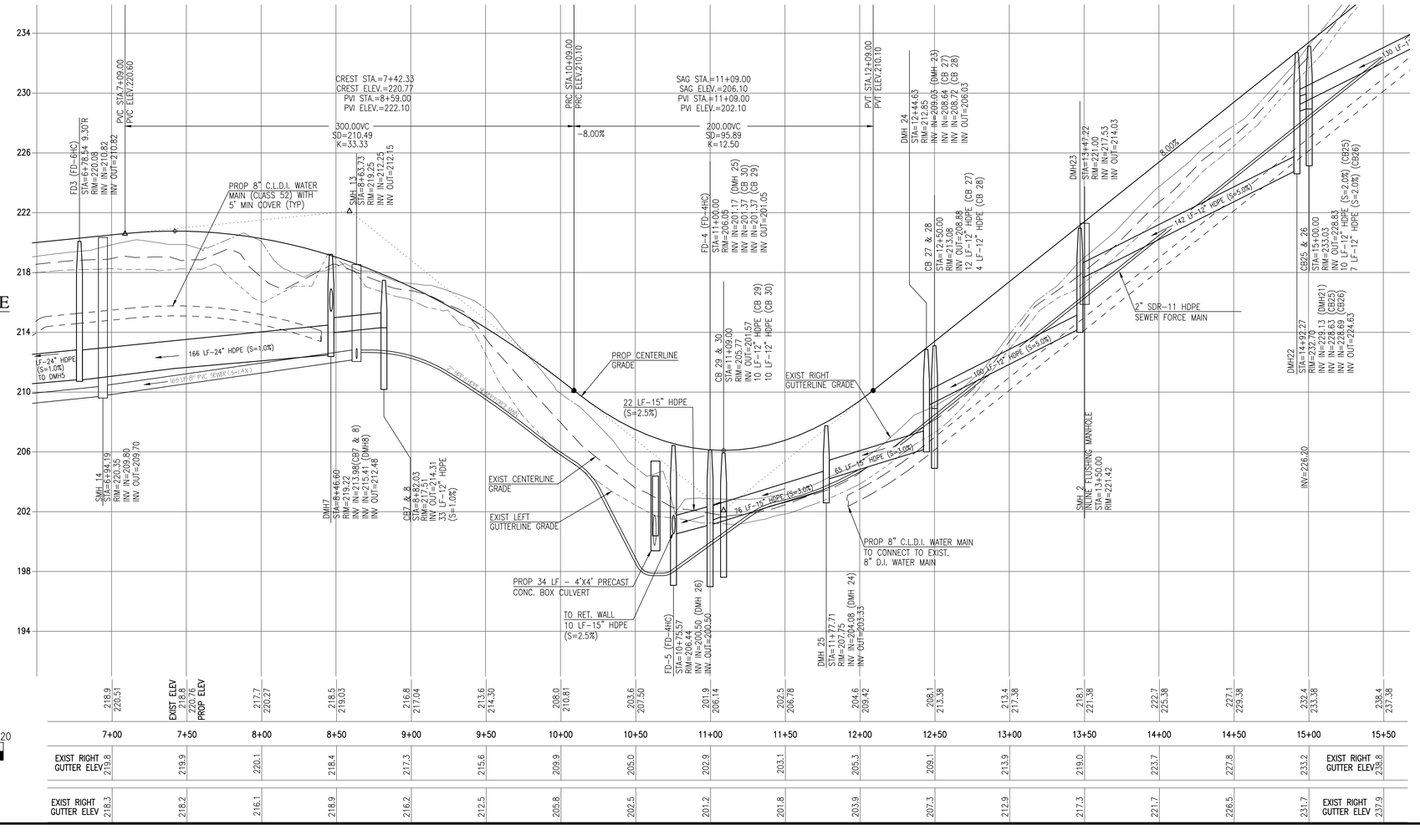

40 0 40 80 120

SCALE IN FEET

COPYRIGHT © BY MERRILL CORPORATION
NO PART OF THIS DOCUMENT MAY BE REPRODUCED, STORED IN A RETRIEVAL SYSTEM, OR TRANSMITTED IN ANY FORM OR BY ANY MEANS, ELECTRONIC, MECHANICAL, PHOTOCOPYING, RECORDING, OR OTHERWISE, WITHOUT THE EXPRESS WRITTEN CONSENT OF MERRILL CORPORATION EXCEPT TO THE EXTENT REQUIRED BY LAW OR THE RULES OF ANY REGULATORY AUTHORITY WHICH MAY REPRODUCE IT IN CONJUNCTION WITH THE PERFORMANCE OF OFFICIAL BUSINESS UNDER ITS JURISDICTION. ANY MODIFICATIONS MADE TO THIS DOCUMENT WITHOUT THE EXPRESS WRITTEN CONSENT OF MERRILL CORPORATION SHALL RENDER IT UNUSABLE.

REVISIONS

KEY PLAN

COMMONWEALTH OF MASSACHUSETTS
DEBORAH W. KELLER
CIVIL
No. 45874
REGISTERED PROFESSIONAL ENGINEER

DRAWN BY: JG

DESIGNED BY: JG/DWK

CHECKED BY: DWK

Merrill
Engineers and Land Surveyors
427 COLUMBIA ROAD, HANOVER, MA 02339 / T: (781) 826-9200
26 UNION STREET, PLYMOUTH MA 02360 / T: (508) 746-6060
WWW.MERRILLINC.COM

SITE PLAN
WOLCOTT WOODS
MILTON, MASSACHUSETTS

PREPARED FOR: WOLCOTT RESIDENTIAL, LLC
80 BEHARRELL STREET, SUITE E
CONCORD, MASSACHUSETTS 01742

AUGUST 31, 2018

SCALE: 1" = 40'

JOB No. 16-079

LATEST REVISION:

ROADWAY PLAN AND PROFILE

SHEET C6.2

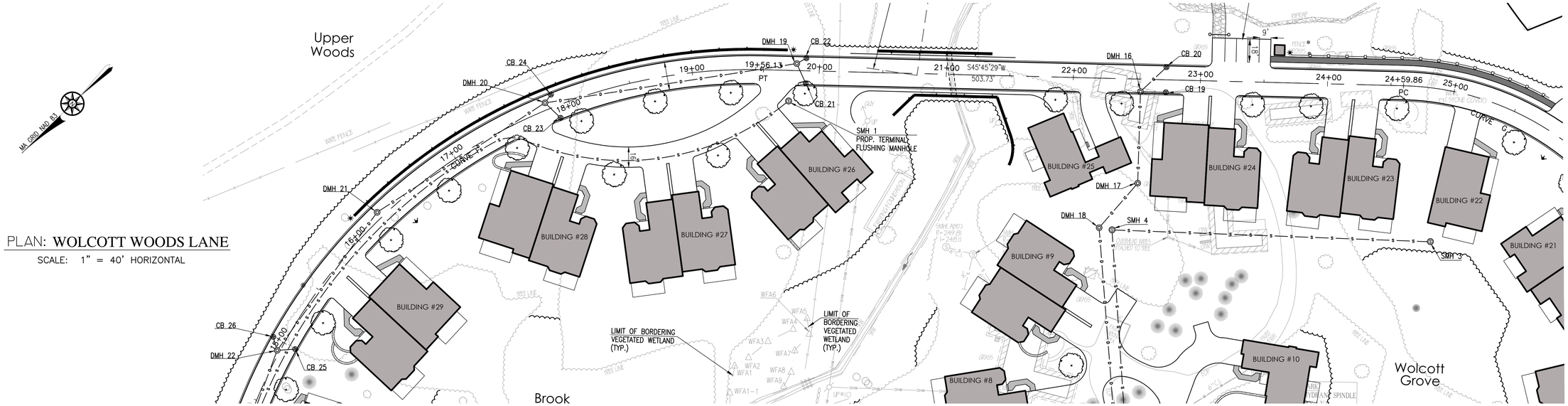

PLAN: **WOLCOTT WOODS LANE**

SCALE: 1" = 40' HORIZONTAL

DESC	RADIUS (FT)	LENGTH (FT)	DELTA (DMS)	START STA	END STA
G	222.00	432.40	111°35'53"	24+59.86	28+92.26

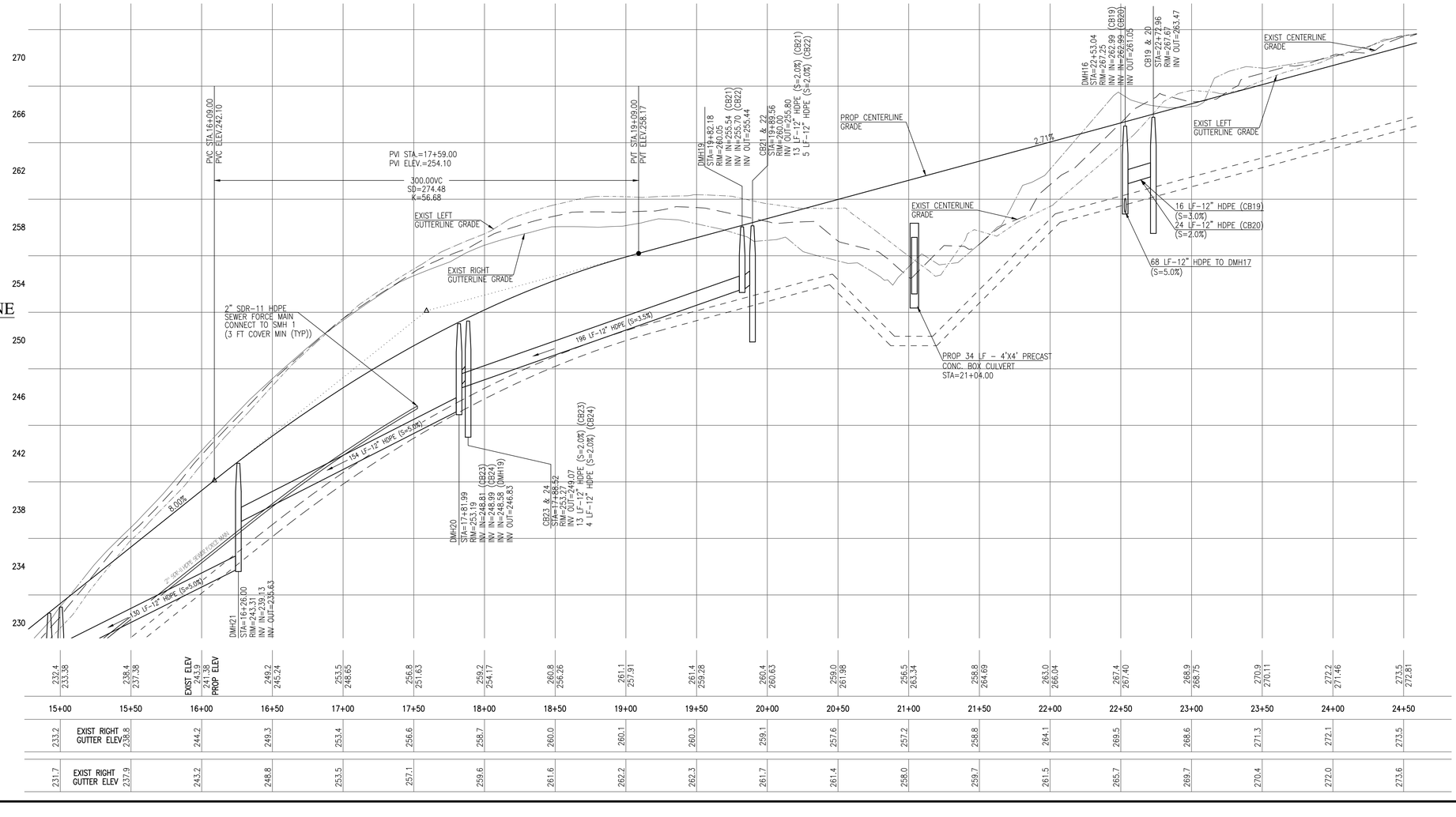

PROFILE: **WOLCOTT WOODS LANE**

SCALES: 1" = 40' HORIZONTAL
1" = 4' VERTICAL

	15+00	15+50	16+00	16+50	17+00	17+50	18+00	18+50	19+00	19+50	20+00	20+50	21+00	21+50	22+00	22+50	23+00	23+50	24+00	24+50
	232.4 / 233.38	238.4 / 237.38	EXIST ELEV 243.9 / PROP ELEV 241.38	249.2 / 245.24	253.5 / 248.65	256.8 / 251.63	259.2 / 254.17	260.8 / 256.26	261.1 / 257.91	261.4 / 259.28	260.4 / 260.63	259.0 / 261.98	256.5 / 263.34	258.8 / 264.69	263.0 / 266.04	267.4 / 267.40	268.9 / 268.75	270.9 / 270.11	272.2 / 271.46	273.5 / 272.81
EXIST RIGHT GUTTER ELEV.	233.2	238.8	244.2	249.3	253.4	256.6	258.7	260.0	260.1	260.3	259.1	257.6	257.2	258.8	264.1	269.5	268.6	271.3	272.1	273.5
EXIST RIGHT GUTTER ELEV	231.7	237.9	243.2	248.8	253.5	257.1	259.6	261.6	262.2	262.3	261.7	261.4	258.0	259.7	261.5	265.7	269.7	270.4	272.0	273.6

40 0 40 80 120

SCALE IN FEET

COPYRIGHT © BY MERRILL CORPORATION
NO PART OF THIS DOCUMENT MAY BE REPRODUCED, STORED IN A RETRIEVAL SYSTEM, OR TRANSMITTED IN ANY FORM OR BY ANY MEANS, ELECTRONIC, MECHANICAL, PHOTOCOPYING, RECORDING, OR OTHERWISE, WITHOUT THE EXPRESS WRITTEN CONSENT OF MERRILL CORPORATION. DISTRIBUTION OF THIS DOCUMENT IN ELECTRONIC FORM MAY BE SUBJECT TO LOCAL REGULATIONS REGARDING THE PRACTICE OF ENGINEERING WITHIN THE JURISDICTION OF ANY REGULATORY AUTHORITY WHICH MAY REPRODUCE IT IN CONJUNCTION WITH THE PERFORMANCE OF OFFICIAL BUSINESS UNDER ITS JURISDICTION. ANY MODIFICATIONS MADE TO THIS DOCUMENT WITHOUT THE EXPRESS WRITTEN CONSENT OF MERRILL CORPORATION SHALL RENDER IT UNUSABLE.

REVISIONS

KEY PLAN

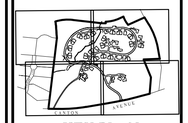

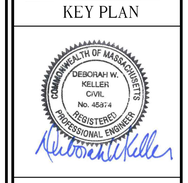

DRAWN BY: JG

DESIGNED BY: JG/DWK

CHECKED BY: DWK

Merrill
Engineers and Land Surveyors
427 COLUMBIA ROAD, HANOVER, MA 02339 / T: (781) 826-9200
26 UNION STREET, PLYMOUTH MA 02360 / T: (508) 746-6060
WWW.MERRILLINC.COM

SITE PLAN
WOLCOTT WOODS
MILTON, MASSACHUSETTS

PREPARED FOR: WOLCOTT RESIDENTIAL, LLC
80 BEHARRELL STREET, SUITE E
CONCORD, MASSACHUSETTS 01742

AUGUST 31, 2018

SCALE: 1" = 40'

JOB No. 16-079

LATEST REVISION:

ROADWAY PLAN AND PROFILE

SHEET C6.3



PLAN: WOLCOTT WOODS LANE

SCALE: 1" = 40' HORIZONTAL



PROFILE: WOLCOTT WOODS LANE

SCALES: 1" = 40' HORIZONTAL
1" = 4' VERTICAL

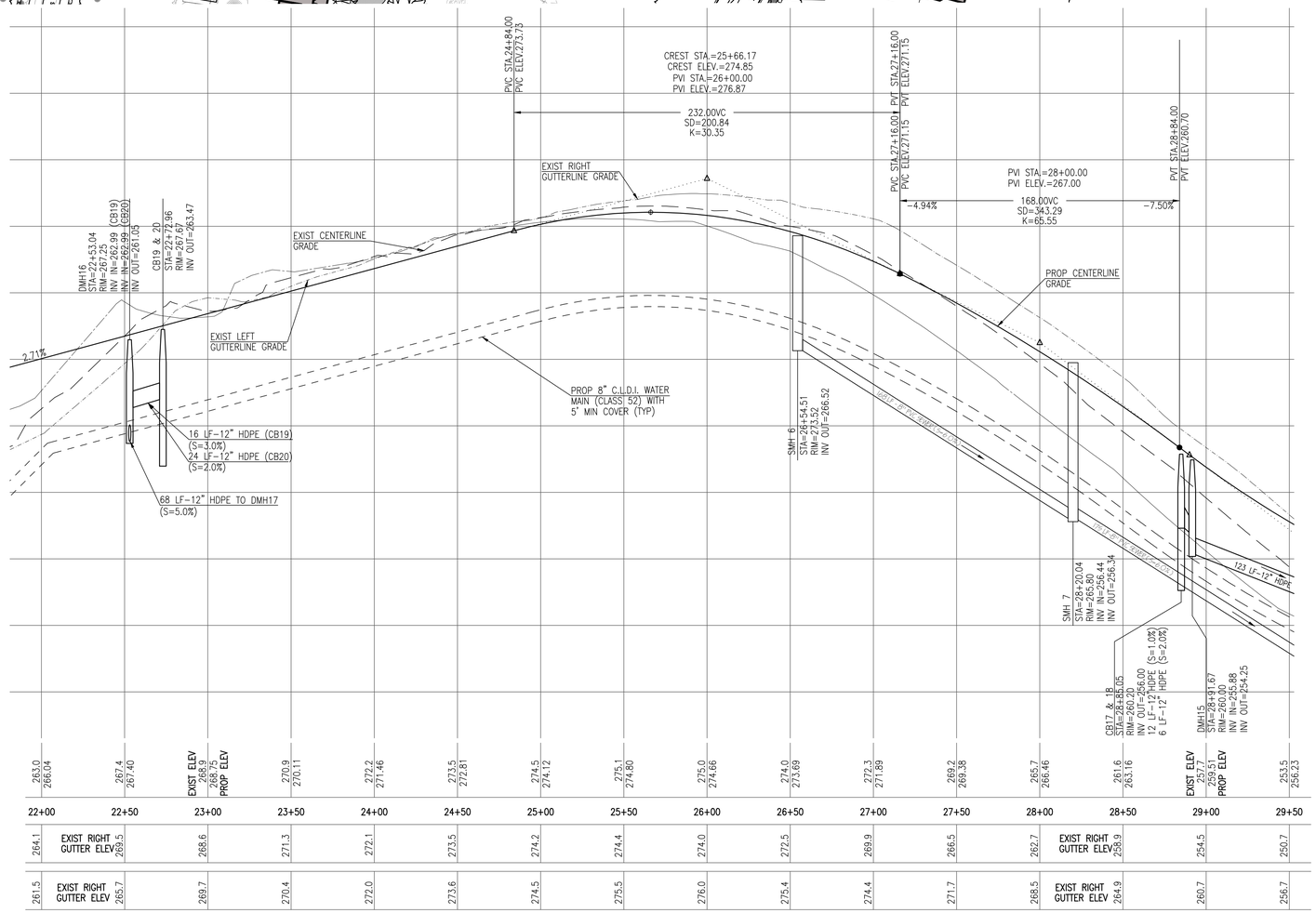

40 0 40 80 120

SCALE IN FEET

COPYRIGHT © BY MERRILL CORPORATION
NO PART OF THIS DOCUMENT MAY BE REPRODUCED, STORED IN A RETRIEVAL SYSTEM, OR TRANSMITTED IN ANY FORM OR BY ANY MEANS, ELECTRONIC, MECHANICAL, PHOTOCOPYING, RECORDING OR OTHERWISE WITHOUT THE EXPRESS WRITTEN CONSENT OF MERRILL CORPORATION WITH THE EXCEPTION OF ANY REGULATORY AUTHORITY WHICH MAY REPRODUCE IT IN CONJUNCTION WITH THE PERFORMANCE OF OFFICIAL BUSINESS UNDER ITS JURISDICTION. ANY MODIFICATIONS MADE TO THIS DOCUMENT WITHOUT THE EXPRESS WRITTEN CONSENT OF MERRILL CORPORATION SHALL RENDER IT UNUSABLE.

REVISIONS

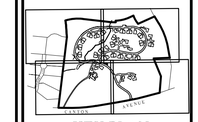

KEY PLAN

COMMONWEALTH OF MASSACHUSETTS
DEBORAH W. KELLER
CIVIL
No. 45874
REGISTERED PROFESSIONAL ENGINEER

DRAWN BY: JG

DESIGNED BY: JG/DWK

CHECKED BY: DWK

Merrill
Engineers and Land Surveyors
427 COLUMBIA ROAD, HANOVER, MA 02339 / T: (781) 826-9200
26 UNION STREET, PLYMOUTH MA 02360 / T: (508) 746-6060
WWW.MERRILLINC.COM

SITE PLAN
WOLCOTT WOODS
MILTON, MASSACHUSETTS

PREPARED FOR: WOLCOTT RESIDENTIAL, LLC
80 BEHARRELL STREET, SUITE E
CONCORD, MASSACHUSETTS 01742

AUGUST 31, 2018

SCALE: 1" = 40'

JOB No. 16-079

LATEST REVISION:

ROADWAY PLAN AND PROFILE

SHEET C6.4

PLAN: **WOLCOTT WOODS LANE**

SCALE: 1" = 40' HORIZONTAL

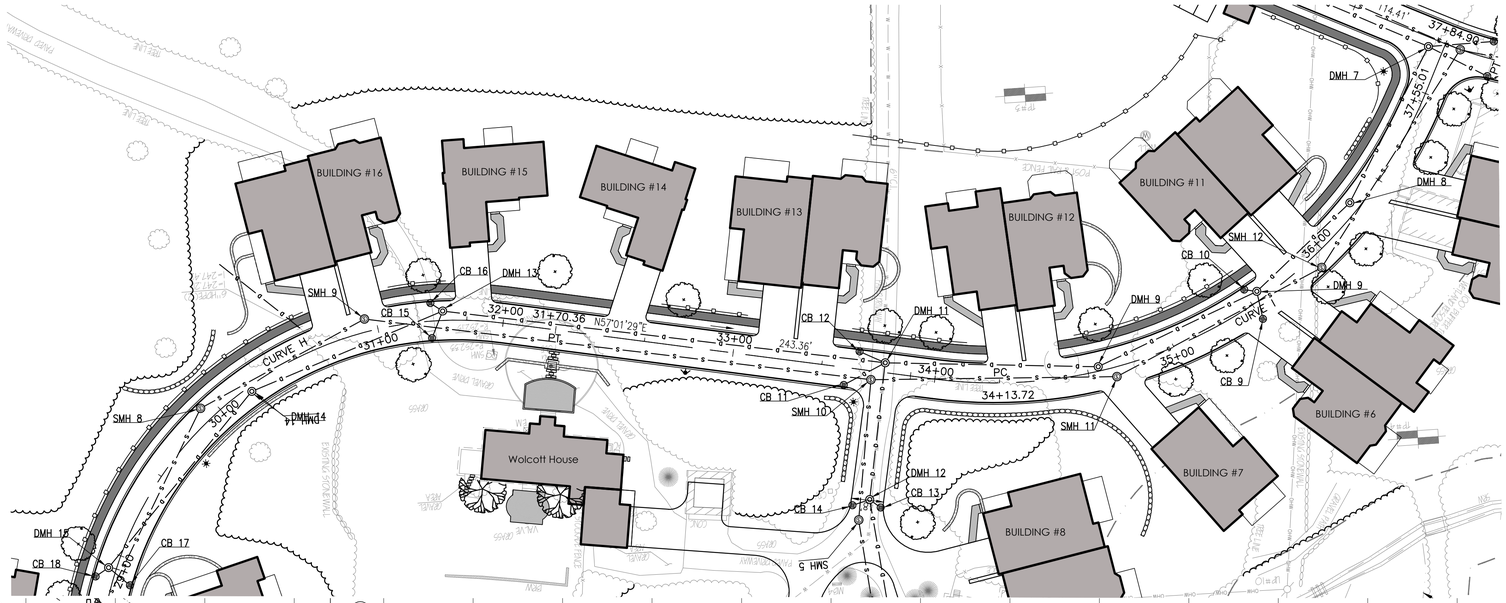

DESC	RADIUS (FT)	LENGTH (FT)	DELTA (DMS)	START STA	END STA
H	200.00	256.23	79°40'07"	28+92.62	31+70.36
I	260.00	341.30	75°12'40"	34+13.72	37+55.01

PROFILE: **WOLCOTT WOODS LANE**

SCALES: 1" = 40' HORIZONTAL
1" = 4' VERTICAL

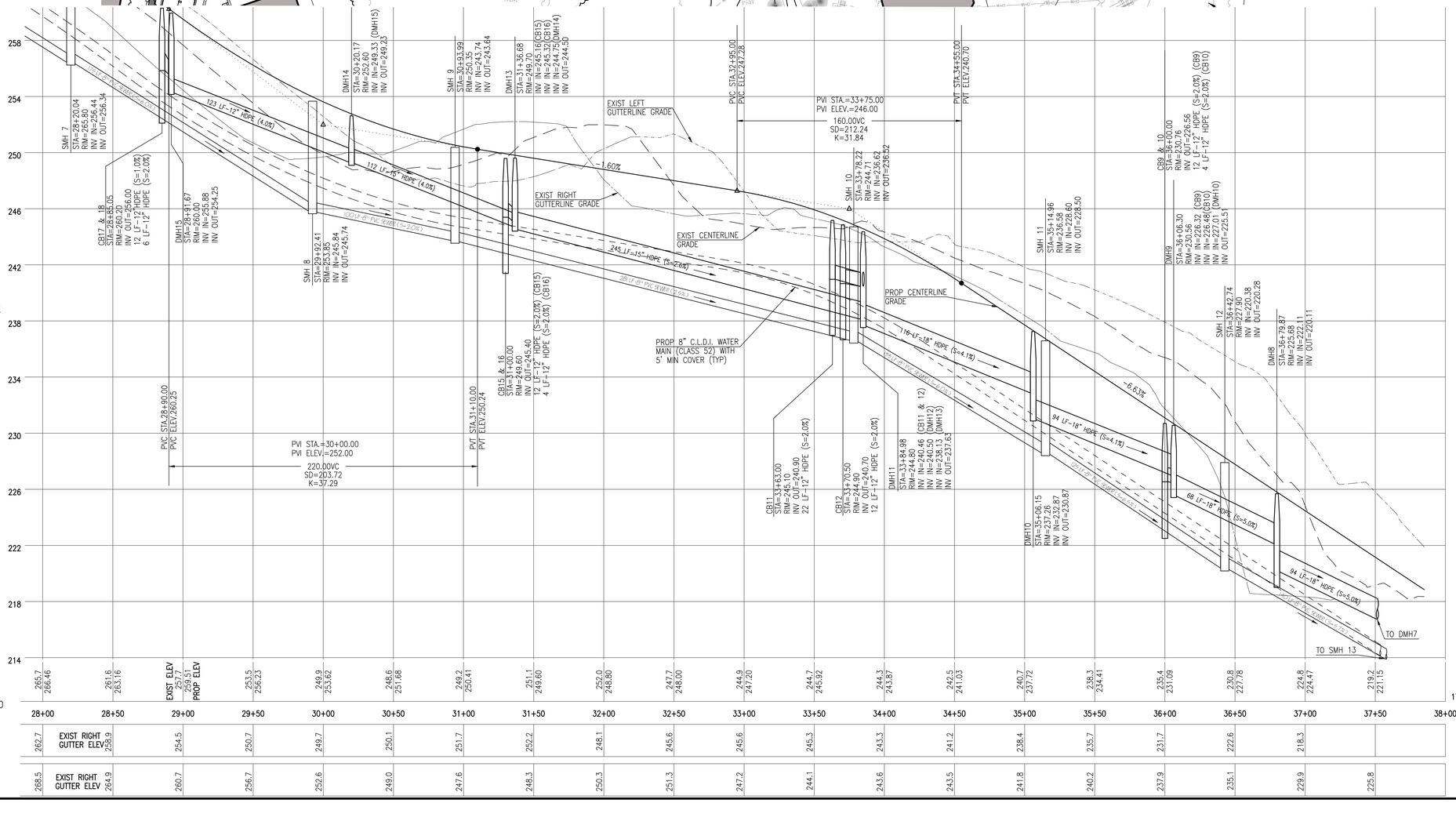

COPYRIGHT © BY MERRILL CORPORATION
NO PART OF THIS DOCUMENT MAY BE REPRODUCED, STORED IN A RETRIEVAL SYSTEM, OR TRANSMITTED IN ANY FORM OR BY ANY MEANS, ELECTRONIC, MECHANICAL, PHOTOCOPYING, RECORDING OR OTHERWISE, WITHOUT THE EXPRESS WRITTEN CONSENT OF MERRILL CORPORATION WITH THE EXCEPTION OF ANY COPYRIGHT AUTHORIZATIONS APPEARING HEREIN, WHICH ARE HEREBY GRANTED. ALL RIGHTS RESERVED. ANY MODIFICATIONS MADE TO THIS DOCUMENT WITHOUT THE EXPRESS WRITTEN CONSENT OF MERRILL CORPORATION SHALL RENDER IT UNUSABLE.

40 0 40 80 120
SCALE IN FEET

REVISIONS

KEY PLAN

DEBORAH W. KELLER
CIVIL
No. 45874
REGISTERED PROFESSIONAL ENGINEER
COMMONWEALTH OF MASSACHUSETTS

DRAWN BY: JG

DESIGNED BY: JG/DWK

CHECKED BY: DWK

Merrill
Engineers and Land Surveyors
427 COLUMBIA ROAD, HANOVER, MA 02339 / T: (781) 826-9200
26 UNION STREET, PLYMOUTH MA 02360 / T: (508) 746-6060
WWW.MERRILLINC.COM

SITE PLAN
WOLCOTT WOODS
MILTON, MASSACHUSETTS

PREPARED FOR: WOLCOTT RESIDENTIAL, LLC
80 BEHARRELL STREET, SUITE E
CONCORD, MASSACHUSETTS 01742

AUGUST 31, 2018

SCALE: 1" = 40'

JOB No. 16-079

LATEST REVISION:

ROADWAY PLAN AND PROFILE

SHEET C6.5

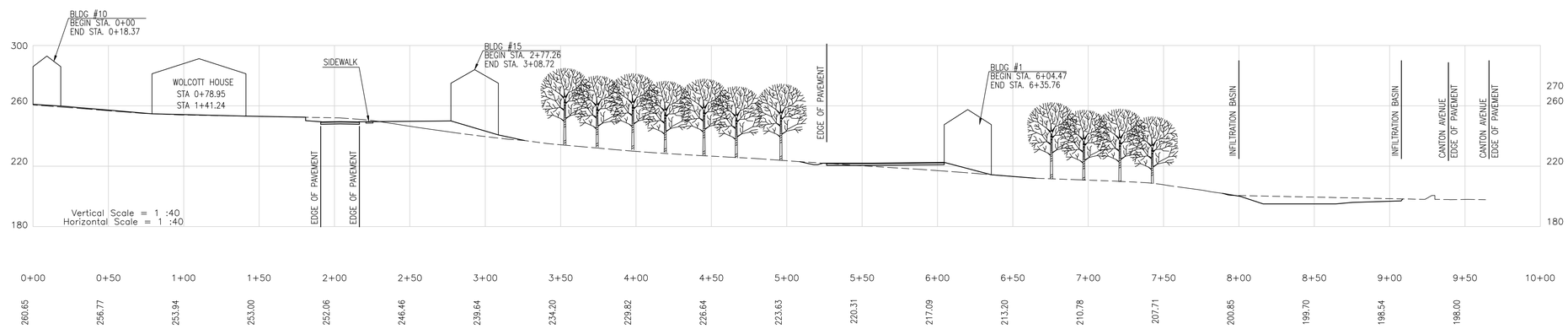

PROFILE VIEW - CROSS SECTIONS

1" = 40'



PLAN VIEW - CROSS SECTIONS

1" = 40'

40 0 40 80 120

SCALE IN FEET

COPYRIGHT © BY MERRILL CORPORATION
NO PART OF THIS DOCUMENT MAY BE REPRODUCED, STORED IN A RETRIEVAL SYSTEM, OR TRANSMITTED IN ANY FORM OR BY ANY MEANS, ELECTRONIC, MECHANICAL, PHOTOCOPYING, RECORDING OR OTHERWISE, WITHOUT THE EXPRESS WRITTEN CONSENT OF MERRILL CORPORATION WITH THE EXCEPTION OF ANY REGULATORY AUTHORITY WHICH MAY REPRODUCE IT IN CONJUNCTION WITH THE PERFORMANCE OF OFFICIAL BUSINESS UNDER ITS JURISDICTION. ANY MODIFICATIONS MADE TO THIS DOCUMENT WITHOUT THE EXPRESS WRITTEN CONSENT OF MERRILL CORPORATION SHALL RENDER IT UNUSABLE.

REVISIONS

KEY PLAN

COMMONWEALTH OF MASSACHUSETTS
DEBORAH W. KELLER
CIVIL
No. 45874
REGISTERED PROFESSIONAL ENGINEER

DRAWN BY: JG

DESIGNED BY: JG/DWK

CHECKED BY: DWK

Merrill
Engineers and Land Surveyors
427 COLUMBIA ROAD, HANOVER, MA 02339 / T: (781) 826-9200
26 UNION STREET, PLYMOUTH MA 02360 / T: (508) 746-6060
WWW.MERRILLINC.COM

SITE PLAN
WOLCOTT WOODS
MILTON, MASSACHUSETTS

PREPARED FOR: WOLCOTT RESIDENTIAL, LLC
80 BEHARRELL STREET, SUITE E
CONCORD, MASSACHUSETTS 01742

AUGUST 31, 2018

SCALE: 1"=40'

JOB No. 16-079

LATEST REVISION:

SITE CROSS SECTIONS

SHEET C7.1

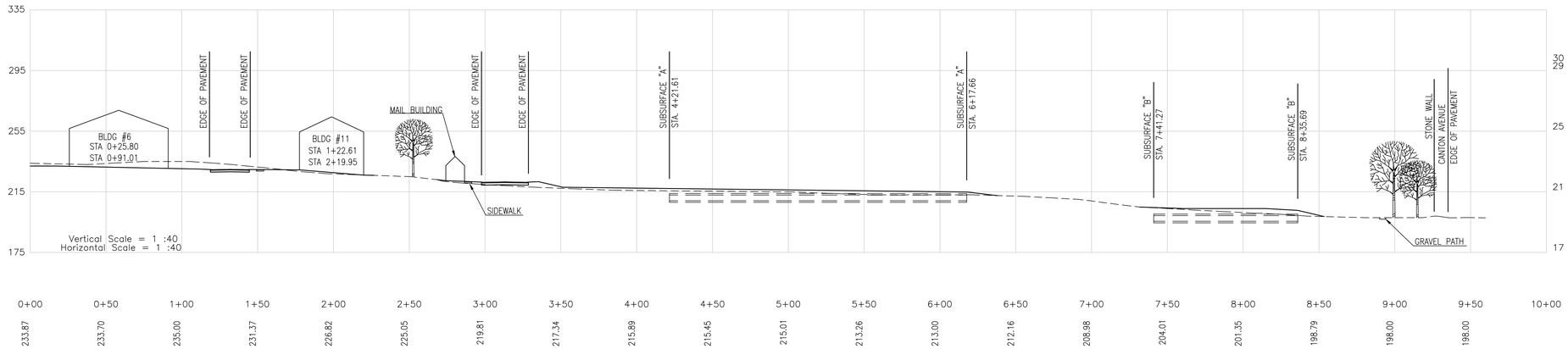

PROFILE VIEW - CROSS SECTIONS

1" = 40'

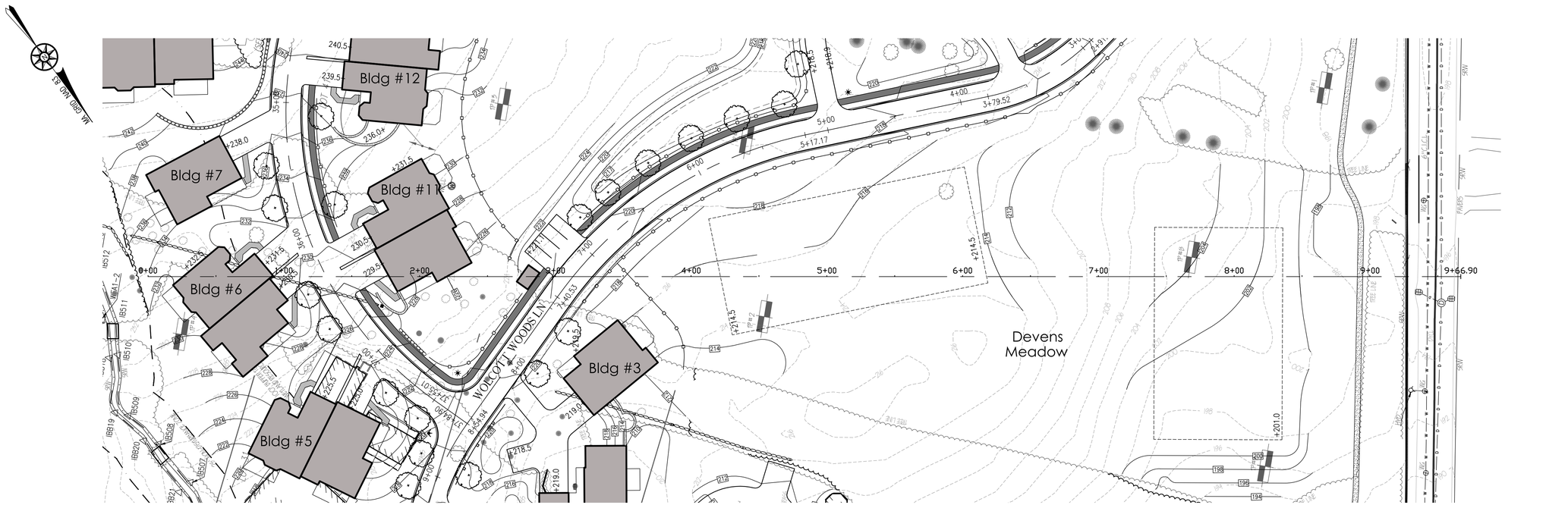

PLAN VIEW - CROSS SECTIONS

1" = 40'

40 0 40 80 120

SCALE IN FEET

COPYRIGHT © BY MERRILL CORPORATION
NO PART OF THIS DOCUMENT MAY BE REPRODUCED, STORED IN A RETRIEVAL SYSTEM, OR TRANSMITTED IN ANY FORM OR BY ANY MEANS, ELECTRONIC, MECHANICAL, PHOTOCOPYING, RECORDING OR OTHERWISE, WITHOUT THE EXPRESS WRITTEN CONSENT OF MERRILL CORPORATION WITH THE EXCEPTION OF ANY REGULATORY AUTHORITY WHICH MAY REPRODUCE IT IN CONJUNCTION WITH THE PERFORMANCE OF OFFICIAL BUSINESS UNDER ITS JURISDICTION. ANY MODIFICATIONS MADE TO THIS DOCUMENT WITHOUT THE EXPRESS WRITTEN CONSENT OF MERRILL CORPORATION SHALL RENDER IT UNUSABLE.

REVISIONS

KEY PLAN

COMMONWEALTH OF MASSACHUSETTS
DEBORAH W. KELLER
CIVIL
No. 45874
REGISTERED PROFESSIONAL ENGINEER

DRAWN BY: JG

DESIGNED BY: JG/DWK

CHECKED BY: DWK

Merrill
Engineers and Land Surveyors
427 COLUMBIA ROAD, HANOVER, MA 02339 / T: (781) 826-9200
26 UNION STREET, PLYMOUTH MA 02360 / T: (508) 746-6060
WWW.MERRILLINC.COM

SITE PLAN
WOLCOTT WOODS
MILTON, MASSACHUSETTS

PREPARED FOR: WOLCOTT RESIDENTIAL, LLC
80 BEHARRELL STREET, SUITE E
CONCORD, MASSACHUSETTS 01742

AUGUST 31, 2018

SCALE: 1"=40'

JOB No. 16-079

LATEST REVISION:

SITE CROSS SECTIONS

SHEET C7.2

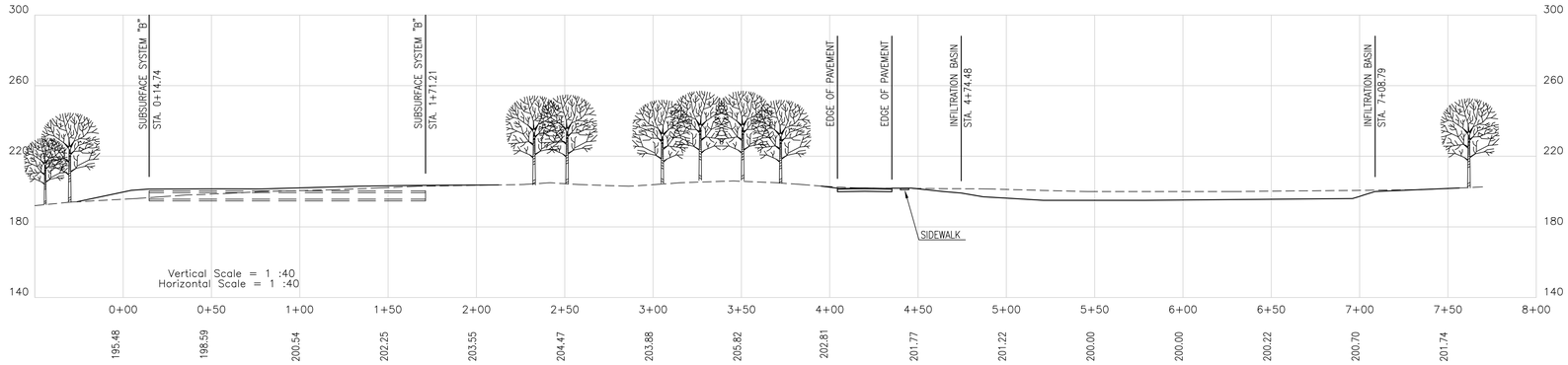

PROFILE VIEW - CROSS SECTIONS

1" = 40'

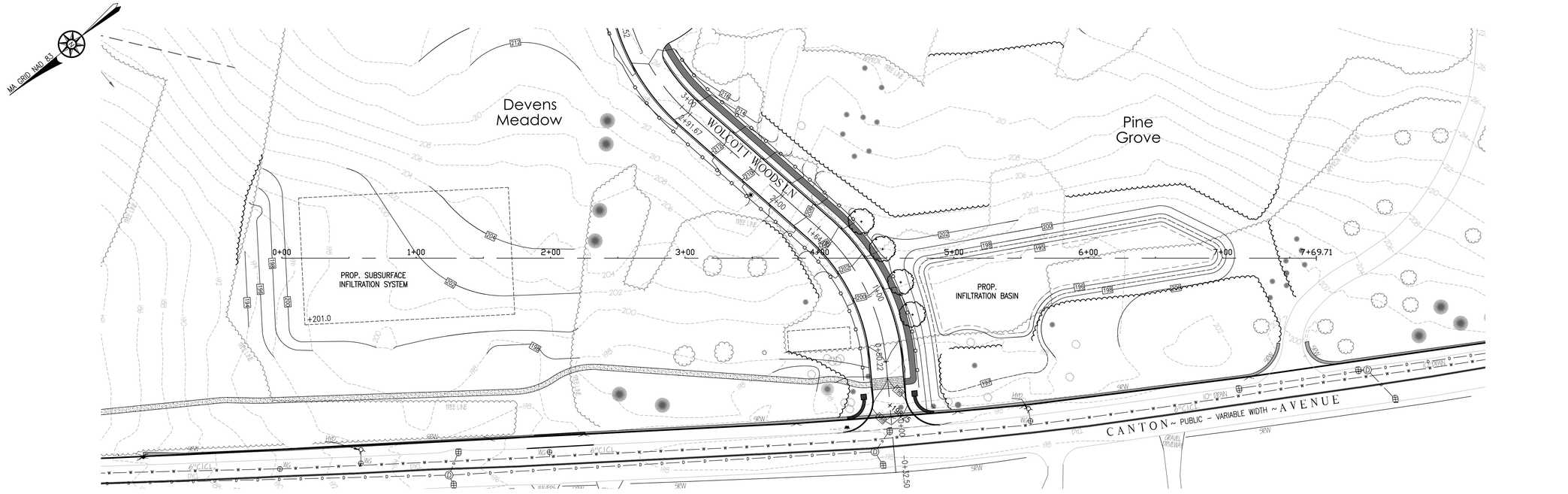

PLAN VIEW - CROSS SECTIONS

1" = 40'

40 0 40 80 120

SCALE IN FEET

COPYRIGHT © BY MERRILL CORPORATION
NO PART OF THIS DOCUMENT MAY BE REPRODUCED, STORED IN A RETRIEVAL SYSTEM, OR TRANSMITTED IN ANY FORM OR BY ANY MEANS, ELECTRONIC, MECHANICAL, PHOTOCOPYING, RECORDING OR OTHERWISE, WITHOUT THE EXPRESS WRITTEN CONSENT OF MERRILL CORPORATION WITH THE EXCEPTION OF ANY REGULATORY AUTHORITY WHICH MAY REPRODUCE IT IN CONJUNCTION WITH THE PERFORMANCE OF OFFICIAL BUSINESS UNDER ITS JURISDICTION. ANY MODIFICATIONS MADE TO THIS DOCUMENT WITHOUT THE EXPRESS WRITTEN CONSENT OF MERRILL CORPORATION SHALL RENDER IT UNUSABLE.

REVISIONS

KEY PLAN

COMMONWEALTH OF MASSACHUSETTS
DEBORAH W. KELLER
CIVIL
No. 45874
REGISTERED PROFESSIONAL ENGINEER

DRAWN BY: JG

DESIGNED BY: JG/DWK

CHECKED BY: DWK

Merrill
Engineers and Land Surveyors
427 COLUMBIA ROAD, HANOVER, MA 02339 / T: (781) 826-9200
26 UNION STREET, PLYMOUTH MA 02360 / T: (508) 746-6060
WWW.MERRILLINC.COM

SITE PLAN
WOLCOTT WOODS
MILTON, MASSACHUSETTS

PREPARED FOR: WOLCOTT RESIDENTIAL, LLC
80 BEHARRELL STREET, SUITE E
CONCORD, MASSACHUSETTS 01742

AUGUST 31, 2018

SCALE: 1"=40'

JOB No. 16-079

LATEST REVISION:

SITE CROSS SECTIONS

SHEET C7.3

MA GRID NAD 83

DEMOLITION NOTES:

1. ALL MANMADE FEATURES TO BE DEMOLISHED AND REMOVED WITHIN THE SITE IN THEIR ENTIRETY UNLESS OTHERWISE NOTED. EXISTING FEATURES TO INCLUDE BUT NOT LIMITED TO UNDERGROUND DRAINAGE STRUCTURES, ABANDONED SEPTIC SYSTEMS COMPONENTS, FENCING, ALL DISCARDED RUBBISH AND/OR TRASH AROUND THE PROPERTY, CURBING, PLANTERS, ASPHALT, SIGNAGE, BOLLARDS, CONCRETE SLABS, AND LIGHTING. ALL DEBRIS TO BE DISPOSED OF IN ACCORDANCE WITH FEDERAL, STATE AND LOCAL REGULATIONS.

2. COMPLETELY FILL BELOW GRADE AREAS AND VOIDS RESULTING FROM THE DEMOLITION ACTIVITIES WITH SOIL MATERIALS CONSISTING OF STONE, GRAVEL AND SAND, FREE FROM DEBRIS, TRASH, FROZEN MATERIALS, ROOTS AND OTHER ORGANIC MATTER. STONES USED WILL NOT BE LARGER THAN 6 INCHES IN DIMENSION. MATERIAL FROM DEMOLITION MAY NOT BE USED AS FILL. PRIOR TO PLACEMENT OF FILL MATERIALS, UNDER TAKE ALL NECESSARY ACTION IN ORDER TO ENSURE THAT AREAS TO BE FILLED ARE FREE OF STANDING WATER, FROZEN MATERIAL, TRASH, DEBRIS. PLACE FILL MATERIALS IN HORIZONTAL LAYERS NOT EXCEEDING 6 INCHES LOOSE DEPTH AND COMPACT EACH LAYER AT PLACEMENT TO 95% OPTIMUM DENSITY, GRADE THE SURFACE TO MEET ADJACENT CONTOURS.

3. CONTRACTOR SHALL BE SOLELY RESPONSIBLE FOR SITE SECURITY AND JOB SAFETY. ALL CONSTRUCTION ACTIVITY SHALL BE IN ACCORDANCE WITH OSHA STANDARDS AND LOCAL REQUIREMENTS.

4. ALL WORK PERFORMED WITHIN THE PUBLIC RIGHT-OF-WAY SHALL CONFORM TO ALL LOCAL MUNICIPAL STANDARDS. CONDUCT DEMOLITION SERVICES IN SUCH A MANNER TO ENSURE MINIMUM INTERFERENCE WITH STREETS, WALKS AND OTHER ADJACENT FACILITIES.

5. THE LOCATIONS OF EXISTING UNDERGROUND UTILITIES ARE IN AN APPROXIMATE WAY ONLY AND HAVE NOT BEEN INDEPENDENTLY VERIFIED BY THE OWNER OR ITS REPRESENTATIVE. THE CONTRACTOR SHALL DETERMINE THE EXACT LOCATION OF ALL EXISTING UTILITIES BEFORE COMMENCING WORK, AND AGREES TO BE FULLY RESPONSIBLE FOR ANY AND ALL DAMAGES WHICH MIGHT BE OCCASIONED BY THE CONTRACTOR'S FAILURE TO EXACTLY LOCATE AND PRESERVE ANY AND ALL UNDERGROUND UTILITIES. ALL REPAIRS SHALL BE MADE AT THE CONTRACTOR'S EXPENSE. THE CONTRACTOR IS TO CONTACT "DIG-SAFE" 72 HOURS PRIOR TO ANY EXCAVATION AT 1-888-344-7233.

6. ALL DOMESTIC WATER AND FIRE PROTECTION SERVICES MUST BE CUT AND CAPPED AT THE PROPERTY LINE. GATE VALVE, FRAME AND COVER AND ALL APPURTENANCES MUST BE REMOVED IN ACCORDANCE WITH THE TOWN WATER DEPARTMENT SPECIFICATIONS AND STANDARD DETAILS.

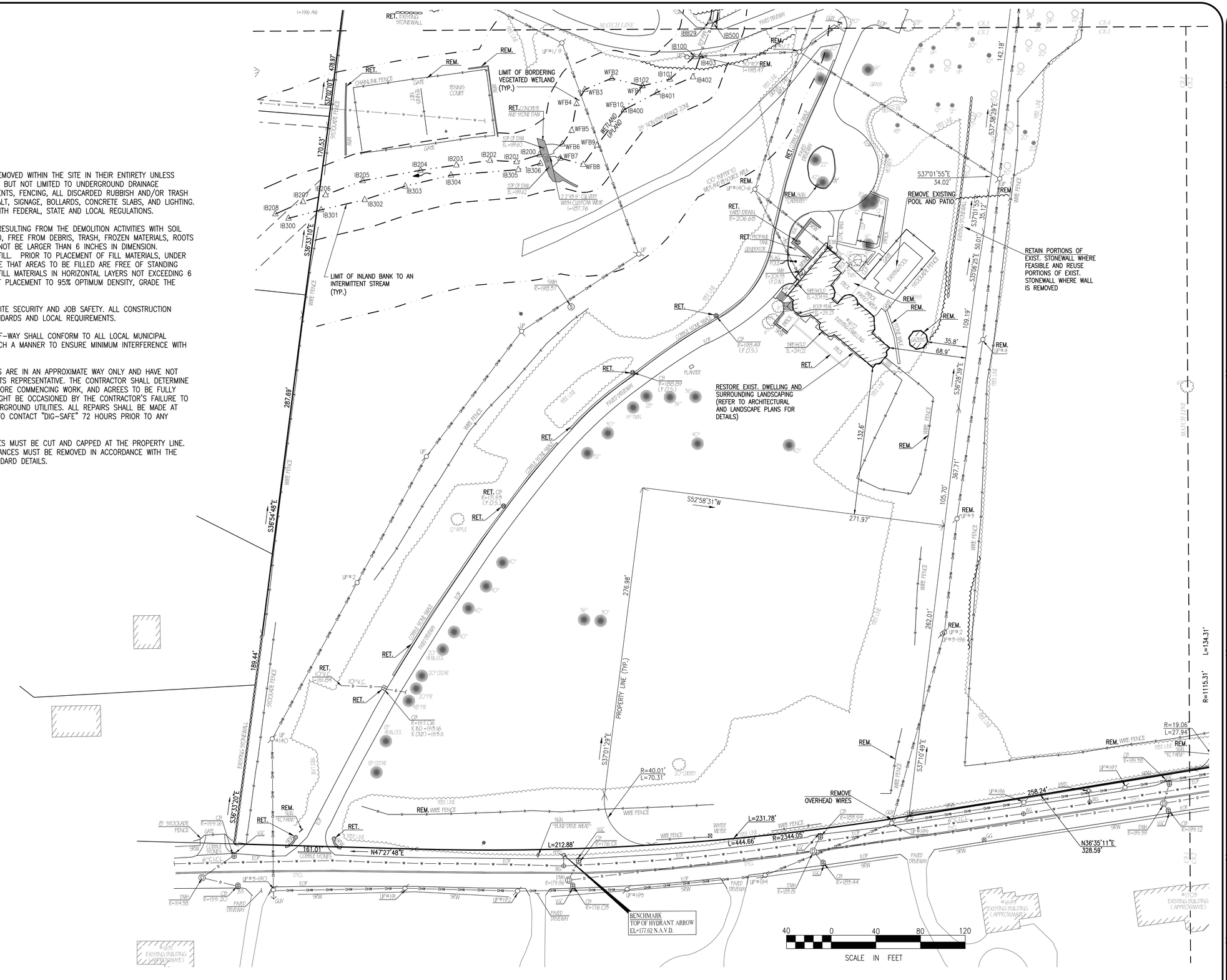
RET. EXISTING STONEWALL
REM.
RET.
CHAIN LINK FENCE
GATE
TENNIS COURT
LIMIT OF BORDERING VEGETATED WETLAND (TYP.)
RET. CONCRETE AND STONE DAM
TOP OF DAM EL.=199.62
12"CMP OUTLET PIPE WITH CUSTOM WEIR I=187.76
WETLAND / UPLAND
75' NOVEMENT BANK ZONE
100' BUFFER TO MEAN ANNUAL HIGH WATER
LIMIT OF INLAND BANK TO AN INTERMITTENT STREAM (TYP.)
WIRE FENCE
STOCKADE FENCE
EXISTING STONEWALL
S36°54'48"E
S36°33'10"E
S36°33'20"E
478.97'
170.53'
287.69'
189.44'
IB100
IB101
IB102
IB200
IB201
IB202
IB203
IB204
IB205
IB206
IB207
IB208
IB300
IB301
IB302
IB303
IB304
IB305
IB306
IB401
IB402
IB403
IB500
IBB29
WFB1
WFB2
WFB3
WFB4
WFB5
WFB6
WFB7
WFB8
WFB9
WFB10
UP #1
UP #2
UP #3-196
UP #140
UP #194
UP #195
UP #196
UP #197
5MH R=198.57
DMH R=199.16
DMH R=199.90
DMH R=199.59
DMH R=199.38
DMH R=199.12
DMH R=195.05
DMH R=195.21
DMH R=194.98
DMH R=179.90
DMH R=176.08
CB R=199.55
CB R=199.38
CB R=199.32
CB R=198.49 (F.O.S.)
CB R=198.89 (F.O.S.)
CB R=197.68 (F.O.S.)
CB R=195.16
CB R=195.20
CB R=195.12
CB R=195.58
CB R=195.44
CB R=176.08
CB R=171.95 (F.O.S.)
CB R=176.04
CB R=176.08
CB R=135.44
CB R=135.55
CB R=135.11
CB R=135.16
CB R=135.33
CB R=135.11
CB R=135.16
CB R=135.33
CB R=135.11
CB R=135.16
CB R=135.33

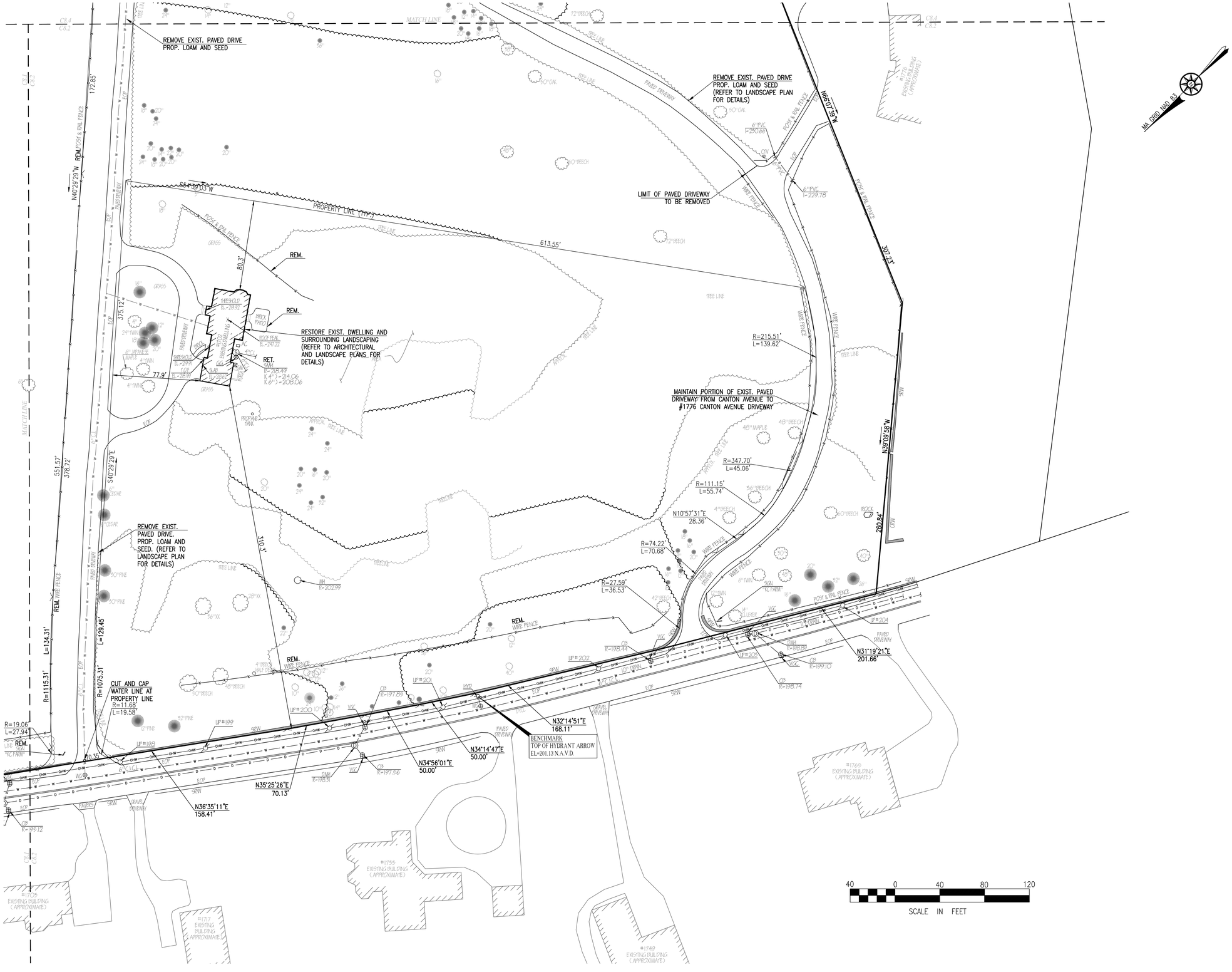

COPYRIGHT © BY MERRILL CORPORATION
NO PART OF THIS DOCUMENT MAY BE REPRODUCED, STORED IN A RETRIEVAL SYSTEM, OR TRANSMITTED IN ANY FORM OR BY ANY MEANS, ELECTRONIC, MECHANICAL, PHOTOCOPYING, RECORDING OR OTHERWISE, WITHOUT THE EXPRESS WRITTEN CONSENT OF MERRILL CORPORATION WITH THE EXCEPTION OF ANY REGULATORY AUTHORITY WHICH MAY REPRODUCE IT IN CONJUNCTION WITH THE PERFORMANCE OF OFFICIAL BUSINESS UNDER ITS JURISDICTION. ANY MODIFICATIONS MADE TO THIS DOCUMENT WITHOUT THE EXPRESS WRITTEN CONSENT OF MERRILL CORPORATION SHALL RENDER IT UNUSABLE.

REVISIONS

KEY PLAN

COMMONWEALTH OF MASSACHUSETTS
DEBORAH W. KELLER
CIVIL
No. 45874
REGISTERED PROFESSIONAL ENGINEER

DRAWN BY: JG

DESIGNED BY: JG/DWK

CHECKED BY: DWK

Merrill
Engineers and Land Surveyors
427 COLUMBIA ROAD, HANOVER, MA 02339 / T: (781) 826-9200
26 UNION STREET, PLYMOUTH MA 02360 / T: (508) 746-6060
WWW.MERRILLINC.COM

SITE PLAN
WOLCOTT WOODS
MILTON, MASSACHUSETTS

PREPARED FOR: WOLCOTT RESIDENTIAL, LLC
80 BEHARRELL STREET, SUITE E
CONCORD, MASSACHUSETTS 01742

AUGUST 31, 2018

SCALE: 1" = 40'

JOB No. 16-079

LATEST REVISION:

DEMOLITION PLAN

SHEET C8.2

MA GRID NAD 83

R=672.11'
L=278.16'
S52°58'31"W
PROPERTY LINE (TYP.)
372.11'
432.25'
S57°58'40"E
71.03'
197.91'
S47°13'14"E
478.97'
WIRE FENCE
EXISTING PATH
TREE LINE
MUNICIPAL WATER
MUNICIPAL SEWER
MUNICIPAL DRAIN
GRAVEL PATH
EXIST. STRUCTURES TO BE RAZED
213.1'
EXIST. STRUCTURE TO BE RAZED
EXIST. BARN AND ACCESSORY STRUCTURES TO BE RAZED
LIMIT OF BORDERING VEGETATED WETLAND (TYP.)
LIMIT OF INLAND BANK TO AN INTERMITTENT STREAM (TYP.)
100' BUFFER TO WETLAND RESOURCE AREA
25' NO DISTURBANCE ZONE
UPLAND WETLAND
BENCHMARK
CENTER OF MANHOLE
RIM EL=199.36 N.A.V.D.
S37°02'10"E
17.8'
25.7'
34.9'
REM.
RET. EXISTING STONEWALL
MATCH LINE
S37°21'39"E
144.30'
92.46'
122.1'
45.3'
S37°25'57"E
77.8'
S37°13'57"E
48.49'
WFA1
WFA1-1
WFA1-2
WFA2
WFA3
WFA4
WFA5
WFA6
WFA7
WFA8
WFA9
IB500
IB501
IB502
IB503
IB504
IB505
IB506
IB507
IB508
IB509
IB510
IB511
IB512
IBB17
IBB18
IBB19
IBB20
IBB21
IBB22
IBB23
IBB24
IBB25
IBB26
IBB27
IBB28
IBB29
IB100
RET.
40 0 40 80 120
SCALE IN FEET

COPYRIGHT © BY MERRILL CORPORATION
NO PART OF THIS DOCUMENT MAY BE REPRODUCED, STORED IN A RETRIEVAL SYSTEM, OR TRANSMITTED IN ANY FORM OR BY ANY MEANS, ELECTRONIC, MECHANICAL, PHOTOCOPYING, RECORDING, OR OTHERWISE, WITHOUT THE PRIOR WRITTEN CONSENT OF MERRILL CORPORATION, EXCEPT AS PROVIDED BY LAW. IN ADDITION, THIS DOCUMENT MAY NOT BE DISCLOSED OR DISTRIBUTED TO THIRD PARTIES BY ANY GOVERNMENTAL BODY OR PUBLIC AUTHORITY WITHOUT THE CORRESPONDING WRITTEN CONSENT OF MERRILL CORPORATION, EXCEPT AS PROVIDED BY LAW. IN ADDITION, THIS DOCUMENT MAY NOT BE DISCLOSED OR DISTRIBUTED TO THIRD PARTIES BY ANY GOVERNMENTAL BODY OR PUBLIC AUTHORITY WHICH MAY REPRODUCE IT IN CONJUNCTION WITH THE PERFORMANCE OF OFFICIAL BUSINESS UNDER ITS JURISDICTION. ANY MODIFICATIONS MADE TO THIS DOCUMENT WITHOUT THE EXPRESS WRITTEN CONSENT OF MERRILL CORPORATION SHALL RENDER IT UNUSABLE.

REVISIONS

KEY PLAN

COMMONWEALTH OF MASSACHUSETTS
DEBORAH W. KELLER
CIVIL
No. 45874
REGISTERED PROFESSIONAL ENGINEER

DRAWN BY: JG

DESIGNED BY: JG/DWK

CHECKED BY: DWK

Merrill
Engineers and Land Surveyors
427 COLUMBIA ROAD, HANOVER, MA 02339 / T: (781) 826-9200
26 UNION STREET, PLYMOUTH MA 02360 / T: (508) 746-6060
WWW.MERRILLINC.COM

SITE PLAN
WOLCOTT WOODS
MILTON, MASSACHUSETTS

PREPARED FOR: WOLCOTT RESIDENTIAL, LLC
80 BEHARRELL STREET, SUITE E
CONCORD, MASSACHUSETTS 01742

AUGUST 31, 2018

SCALE: 1" = 40'

JOB No. 16-079

LATEST REVISION:

DEMOLITION PLAN

SHEET C8.3

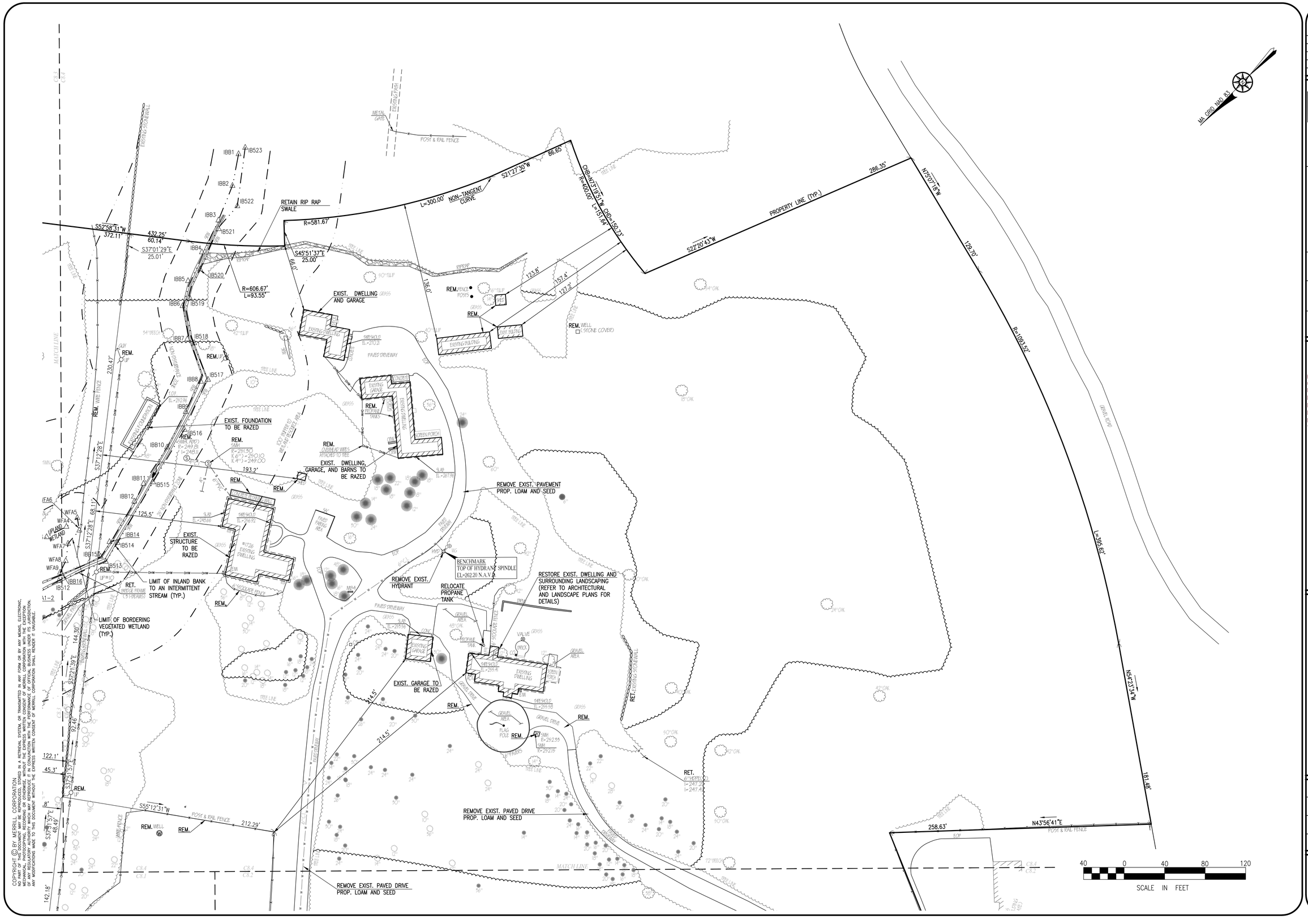

COPYRIGHT © BY MERRILL CORPORATION
NO PART OF THIS DOCUMENT MAY BE REPRODUCED, STORED IN A RETRIEVAL SYSTEM, OR TRANSMITTED IN ANY FORM OR BY ANY MEANS, ELECTRONIC, MECHANICAL, PHOTOCOPYING, RECORDING OR OTHERWISE, WITHOUT THE EXPRESS WRITTEN CONSENT OF MERRILL CORPORATION WITH THE EXCEPTION OF ANY REGULATORY AUTHORITY WHICH MAY REPRODUCE IT IN CONJUNCTION WITH THE PERFORMANCE OF OFFICIAL BUSINESS UNDER ITS JURISDICTION. ANY MODIFICATIONS MADE TO THIS DOCUMENT WITHOUT THE EXPRESS WRITTEN CONSENT OF MERRILL CORPORATION SHALL RENDER IT UNUSABLE.

REVISIONS

KEY PLAN

COMMONWEALTH OF MASSACHUSETTS
DEBORAH W. KELLER
CIVIL
No. 45874
REGISTERED PROFESSIONAL ENGINEER

DRAWN BY: JG

DESIGNED BY: JG/DWK

CHECKED BY: DWK

Merrill
Engineers and Land Surveyors
427 COLUMBIA ROAD, HANOVER, MA 02339 / T: (781) 826-9200
26 UNION STREET, PLYMOUTH MA 02360 / T: (508) 746-6060
WWW.MERRILLINC.COM

SITE PLAN
WOLCOTT WOODS
MILTON, MASSACHUSETTS

PREPARED FOR: WOLCOTT RESIDENTIAL, LLC
80 BEHARRELL STREET, SUITE E
CONCORD, MASSACHUSETTS 01742

AUGUST 31, 2018

SCALE: 1" = 40'

JOB No. 16-079

LATEST REVISION:

DEMOLITION PLAN

SHEET C8.4

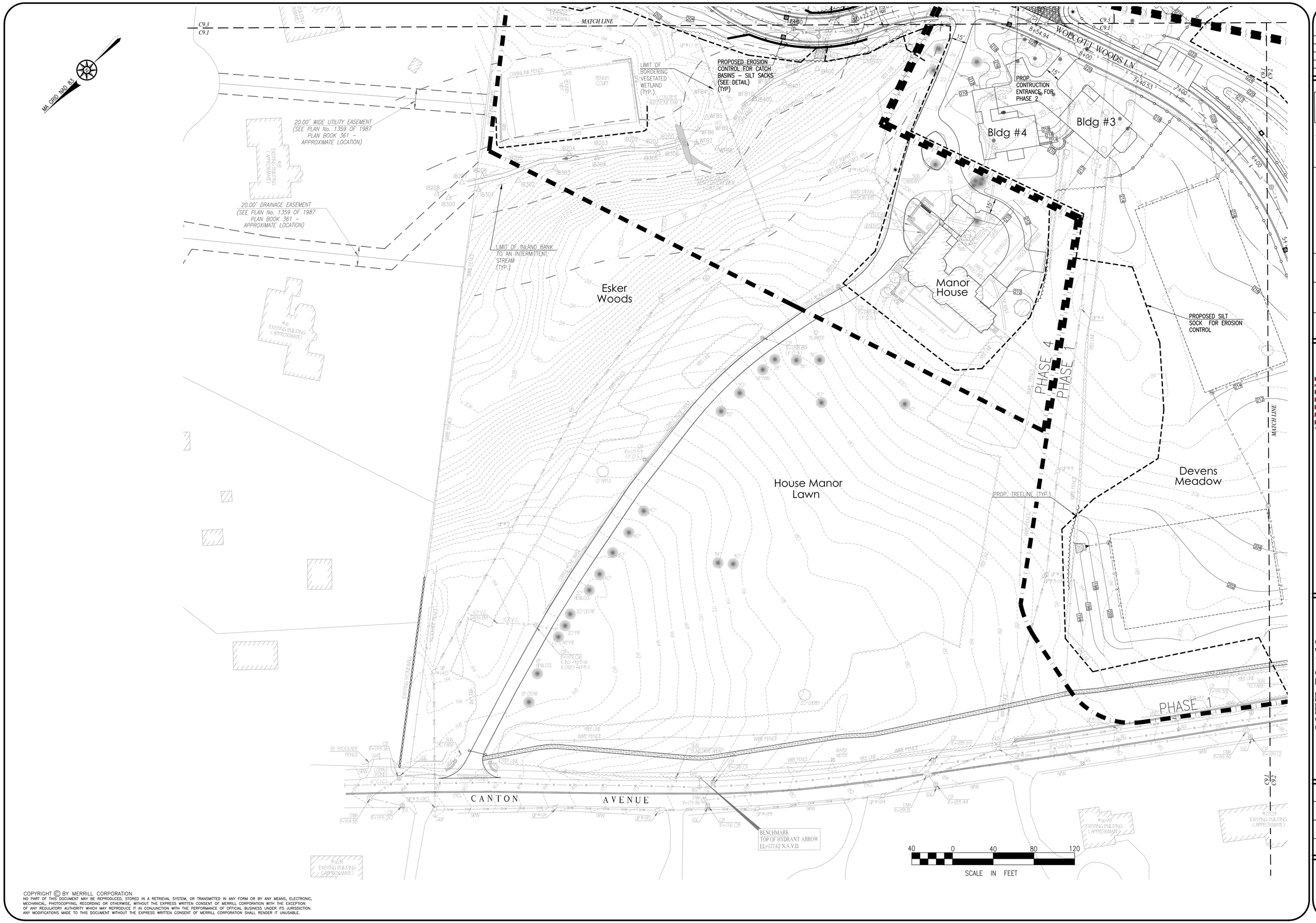

COPYRIGHT © BY MERRILL CORPORATION
NO PART OF THIS DOCUMENT MAY BE REPRODUCED, STORED IN A RETRIEVAL SYSTEM, OR TRANSMITTED IN ANY FORM OR BY ANY MEANS, ELECTRONIC, MECHANICAL, PHOTOCOPYING, RECORDING OR OTHERWISE, WITHOUT THE EXPRESS WRITTEN CONSENT OF MERRILL CORPORATION WITH THE EXCEPTION OF ANY REGULATORY AUTHORITY WHICH MAY REPRODUCE IT IN CONJUNCTION WITH THE PERFORMANCE OF OFFICIAL BUSINESS UNDER ITS JURISDICTION. ANY MODIFICATIONS MADE TO THIS DOCUMENT WITHOUT THE EXPRESS WRITTEN CONSENT OF MERRILL CORPORATION SHALL RENDER IT UNUSABLE.

REVISIONS

KEY PLAN

COMMONWEALTH OF MASSACHUSETTS
DEBORAH W. KELLER
CIVIL
No. 45874
REGISTERED PROFESSIONAL ENGINEER

DRAWN BY: JG

DESIGNED BY: JG/DWK

CHECKED BY: DWK

Merrill
Engineers and Land Surveyors
427 COLUMBIA ROAD, HANOVER, MA 02339 / T: (781) 826-9200
26 UNION STREET, PLYMOUTH MA 02360 / T: (508) 746-6060
WWW.MERRILLINC.COM

SITE PLAN
WOLCOTT WOODS
MILTON, MASSACHUSETTS

PREPARED FOR: WOLCOTT RESIDENTIAL, LLC
80 BEHARRELL STREET, SUITE E
CONCORD, MASSACHUSETTS 01742

AUGUST 31, 2018

SCALE: 1" = 40'

JOB No. 16-079

LATEST REVISION:

CONSTRUCTION PHASING & EROSION CONTROL PLAN

SHEET C9.1

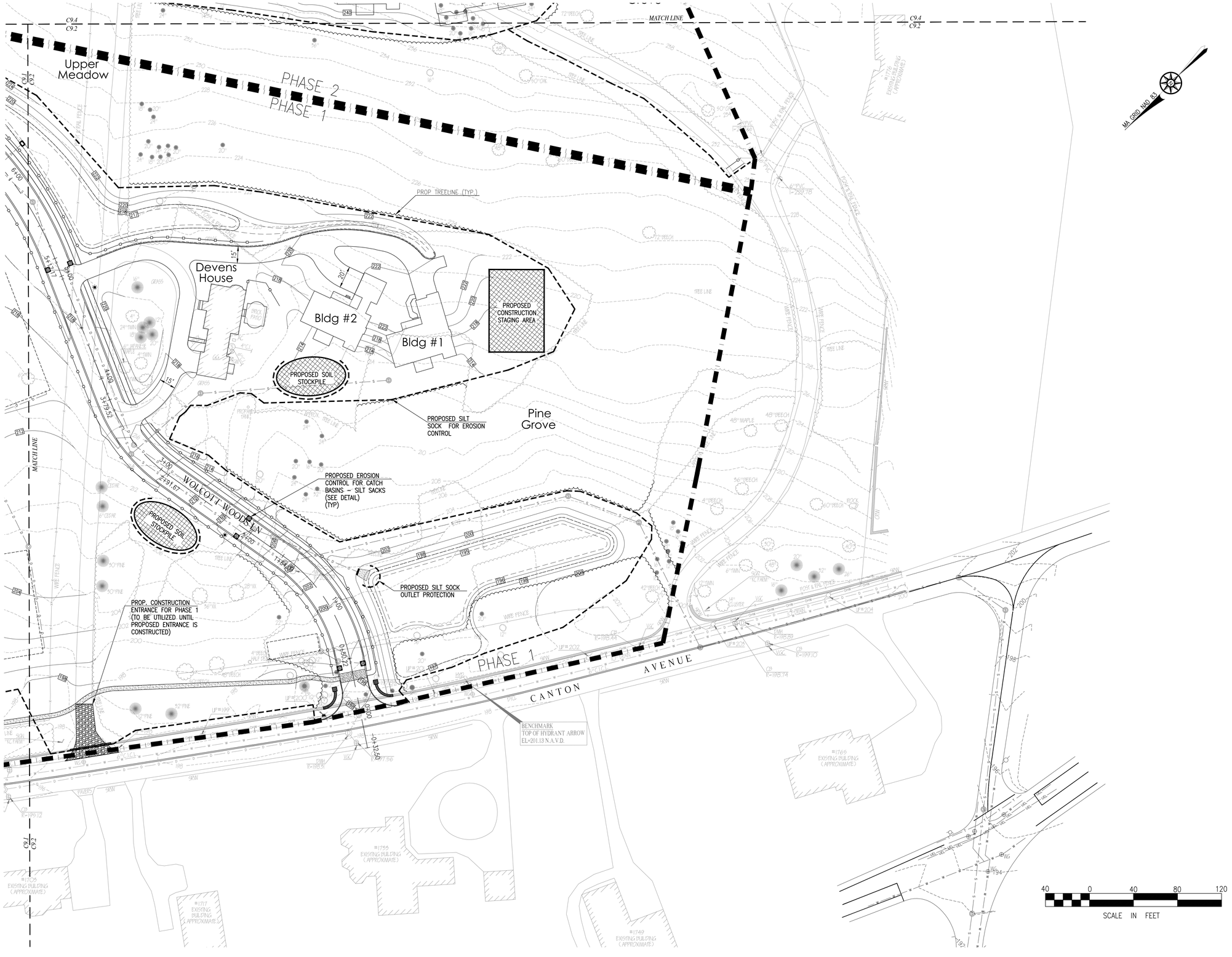

COPYRIGHT © BY MERRILL CORPORATION
NO PART OF THIS DOCUMENT MAY BE REPRODUCED, STORED IN A RETRIEVAL SYSTEM, OR TRANSMITTED IN ANY FORM OR BY ANY MEANS, ELECTRONIC, MECHANICAL, PHOTOCOPYING, RECORDING OR OTHERWISE, WITHOUT THE EXPRESS WRITTEN CONSENT OF MERRILL CORPORATION WITH THE EXCEPTION OF ANY REGULATORY AUTHORITY WHICH MAY REPRODUCE IT IN CONJUNCTION WITH THE PERFORMANCE OF OFFICIAL BUSINESS UNDER ITS JURISDICTION. ANY MODIFICATIONS MADE TO THIS DOCUMENT WITHOUT THE EXPRESS WRITTEN CONSENT OF MERRILL CORPORATION SHALL RENDER IT UNUSABLE.

REVISIONS

KEY PLAN

COMMONWEALTH OF MASSACHUSETTS
DEBORAH W. KELLER
CIVIL
No. 45874
REGISTERED PROFESSIONAL ENGINEER

DRAWN BY: JG

DESIGNED BY: JG/DWK

CHECKED BY: DWK

Merrill
Engineers and Land Surveyors
427 COLUMBIA ROAD, HANOVER, MA 02339 / T: (781) 826-9200
26 UNION STREET, PLYMOUTH MA 02360 / T: (508) 746-6060
WWW.MERRILLINC.COM

SITE PLAN
WOLCOTT WOODS
MILTON, MASSACHUSETTS

PREPARED FOR: WOLCOTT RESIDENTIAL, LLC
80 BEHARRELL STREET, SUITE E
CONCORD, MASSACHUSETTS 01742

AUGUST 31, 2018

SCALE: 1" = 40'

JOB No. 16-079

LATEST REVISION:

CONSTRUCTION PHASING & EROSION CONTROL PLAN

SHEET C9.2

EROSION AND SEDIMENTATION CONTROL NOTES:

1. THE CONTRACTOR SHALL COORDINATE A PRE CONSTRUCTION MEETING AT LEAST 48 HOURS PRIOR TO ANY CONSTRUCTION ACTIVITY WITH THE DEVELOPER, TOWN PLANNER, AND ANY INTERESTED TOWN DEPARTMENT REPRESENTATIVES. REFER TO STORMWATER POLLUTION PREVENTION PLAN (SWPP) AND CONSTRUCTION PHASE B.M.P. OPERATION AND MAINTENANCE PLAN AS APPROVED.

2. CONTRACTOR SHALL INSTALL EROSION CONTROL MEASURES PRIOR TO EARTHWORK OPERATION AND MAINTAIN ALL EROSION MEASURES DURING CONSTRUCTION. EROSION CONTROL MEASURES SHALL BE REMOVED ONLY UPON THE ESTABLISHMENT OF ALL LANDSCAPED AREAS AND FINAL PAVEMENT IS INSTALLED.

3. IF EXISTING DRAINAGE STRUCTURES ARE TO BE USED DURING CONSTRUCTION, SILT SACKS SHALL BE INSTALLED PRIOR TO THE COMMENCEMENT OF WORK.

4. STEEP SLOPES, WHERE POSSIBLE, WILL NOT BE DISTURBED.

5. NATURAL WATERWAYS WILL BE PRESERVED AND PROTECTED, AND EXISTING VEGETATION WILL BE RETAINED AND PROTECTED TO THE EXTENT PRACTICABLE.

6. THE CONTRACTOR SHALL MINIMIZE THE AREAS OF DISTURBED LAND TO THE THE EXTENT FEASIBLE.

7. SEDIMENT CONTROL MEASURES WILL BE APPLIED TO CONTROL ANY SEDIMENTS THAT MAY BE PRODUCED AS A RESULT OF SITE CONSTRUCTION ACTIVITIES. EROSION AND DEPOSITION OF SEDIMENT WILL BE CLOSELY MONITORED DURING CONSTRUCTION.

8. TEMPORARY EROSION CONTROL MEASURES WILL INCLUDE HAY BALE CHECK DAMS, FILTER FABRIC, SILT FENCES, CONSTRUCTION FENCES, SILT SOCKS, SEEDING AND MULCHING, AND SEEDED FILTER TRAPS.

9. TOPSOIL STRIPPED FROM CUT AND FILL AREAS WILL BE STOCKPILED FOR LOAMING AND SEEDING AT LATER CONSTRUCTION STAGES. THE STOCKPILES SHALL BE LOCATED SO AS TO ACT AS TEMPORARY DIVERSIONS, GENERALLY ON THE UPHILL SLOPE.

10. STOCKPILES SHALL BE SURROUNDED ON THEIR PERIMETER WITH SILT SOCK AND/OR SILTATION FENCES TO PREVENT AND/OR CONTROL SILTATION AND EROSION. THE LOCATION OF THE STOCKPILE AREAS MAY BE MODIFIED AS APPROVED BY THE ENGINEER.

11. TOPS OF STOCKPILES SHALL BE COVERED IN SUCH A MANNER SO THAT STORMWATER DOES NOT INFILTRATE THE MATERIALS AND THEREBY RENDER THE SAME UNSUITABLE FOR FILL USE.

12. ALL DISTURBED OR EXPOSED AREAS SUBJECT TO EROSION SHALL BE STABILIZED WITH MULCH OR SEEDED FOR TEMPORARY VEGETATIVE COVER. WHERE CONSTRUCTION ACTIVITIES HAVE PERMANENTLY CEASED OR HAVE TEMPORARILY BEEN SUSPENDED FOR MORE THAN SEVEN DAYS, OR WHEN FINAL GRADES ARE REACHED IN ANY PORTION OF THE SITE, STABILIZATION PRACTICES SHALL BE IMPLEMENTED WITHIN THREE DAYS. AREAS THAT REMAIN DISTURBED BUT INACTIVE FOR AT LEAST THIRTY DAYS SHALL RECEIVE TEMPORARY SEEDING IN ACCORDANCE WITH THE MASSACHUSETTS EROSION AND SEDIMENT CONTROL GUIDELINES.

13. EARTHWORK ACTIVITY ON THE SITE SHALL BE DONE IN A MANNER SUCH THAT RUNOFF IS DIRECTED TO THE LINE OF SILT SOCK EROSION CONTROL.

14. DURING UTILITY CONSTRUCTION, ALL WATER PUMPED FROM THE EXCAVATED TRENCH SHALL BE DIRECTED TO A "DIRT BAG" PUMPED SEDIMENT REMOVAL SYSTEM (OR APPROVED EQUAL) AS MANUFACTURED BY ACF ENVIRONMENTAL.

15. CULVERT/PIPE INLETS AND OUTFALLS SHALL BE PROTECTED BY HAYBALE FILTERS UNTIL DISTURBED AREAS ARE PERMANENTLY STABILIZED.

16. SILT SACKS SHALL BE UTILIZED AT ALL EXISTING AND PROPOSED CATCH BASINS SUBJECT TO STORMWATER RUNOFF FROM PROPOSED FILL AREAS DURING CONSTRUCTION, OR AS DIRECTED BY THE OWNER/ENGINEER. NO SEDIMENT SHALL ENTER THE ON-SITE DRAINAGE SYSTEMS AT ANY TIME.

17. ALL EROSION CONTROL MEASURES SHALL BE ROUTINELY INSPECTED, CLEANED AND REPAIRED REPLACED AS NECESSARY THROUGHOUT ALL PHASES OF CONSTRUCTION. IN ADDITION, INSPECTION SHALL TAKE PLACE AFTER EACH RAINFALL EVENT.

18. ALL PROPOSED SLOPES (EXCLUDING THE RIPRAP SLOPE) STEEPER THAN 3:1 SHALL BE STABILIZED WITH A CURLEX EROSION CONTROL MATTING BY AMERICAN EXCELSIOR COMPANY (OR APPROVED EQUAL) AND PROTECTED FROM EROSION.

18. THE CONTRACTOR SHALL KEEP ON SITE AT ALL TIMES ADDITIONAL SILT SOCK AND EXTRA SILTATION FENCING FOR INSTALLATION AT THE DIRECTION OF THE ENGINEER, THE CONSERVATION COMMISSION OR THE PLANNING BOARD TO MITIGATE ANY EMERGENCY CONDITION.

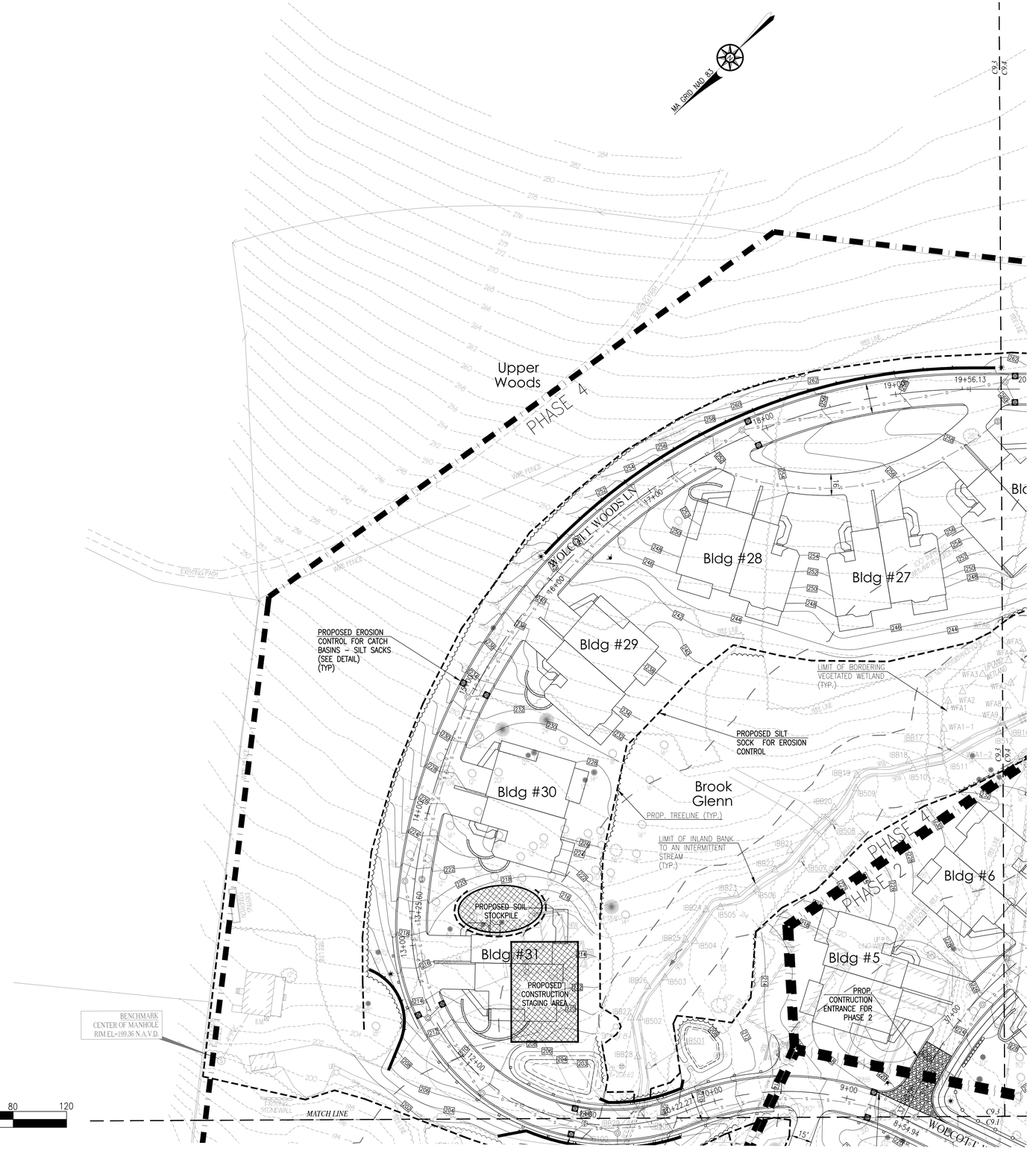

COPYRIGHT © BY MERRILL CORPORATION
NO PART OF THIS DOCUMENT MAY BE REPRODUCED, STORED IN A RETRIEVAL SYSTEM, OR TRANSMITTED IN ANY FORM OR BY ANY MEANS, ELECTRONIC, MECHANICAL, PHOTOCOPYING, RECORDING OR OTHERWISE, WITHOUT THE EXPRESS WRITTEN CONSENT OF MERRILL CORPORATION, EXCEPT AS REQUIRED BY LAW OR BY ANY REGULATORY AUTHORITY WHICH MAY REPRODUCE IT IN CONJUNCTION WITH THE PERFORMANCE OF OFFICIAL BUSINESS UNDER ITS JURISDICTION. ANY MODIFICATIONS MADE TO THIS DOCUMENT WITHOUT THE EXPRESS WRITTEN CONSENT OF MERRILL CORPORATION SHALL RENDER IT UNUSABLE.

REVISIONS

KEY PLAN

COMMONWEALTH OF MASSACHUSETTS
DEBORAH W. KELLER
CIVIL
No. 45874
REGISTERED PROFESSIONAL ENGINEER

DRAWN BY: JG

DESIGNED BY: JG/DWK

CHECKED BY: DWK

Merrill
Engineers and Land Surveyors
427 COLUMBIA ROAD, HANOVER, MA 02339 / T: (781) 826-9200
26 UNION STREET, PLYMOUTH MA 02360 / T: (508) 746-6060
WWW.MERRILLINC.COM

SITE PLAN
WOLCOTT WOODS
MILTON, MASSACHUSETTS

PREPARED FOR: WOLCOTT RESIDENTIAL, LLC
80 BEHARRELL STREET, SUITE E
CONCORD, MASSACHUSETTS 01742

AUGUST 31, 2018

SCALE: 1" = 40'

JOB No. 16-079

LATEST REVISION:

CONSTRUCTION PHASING & EROSION CONTROL PLAN

SHEET C9.3

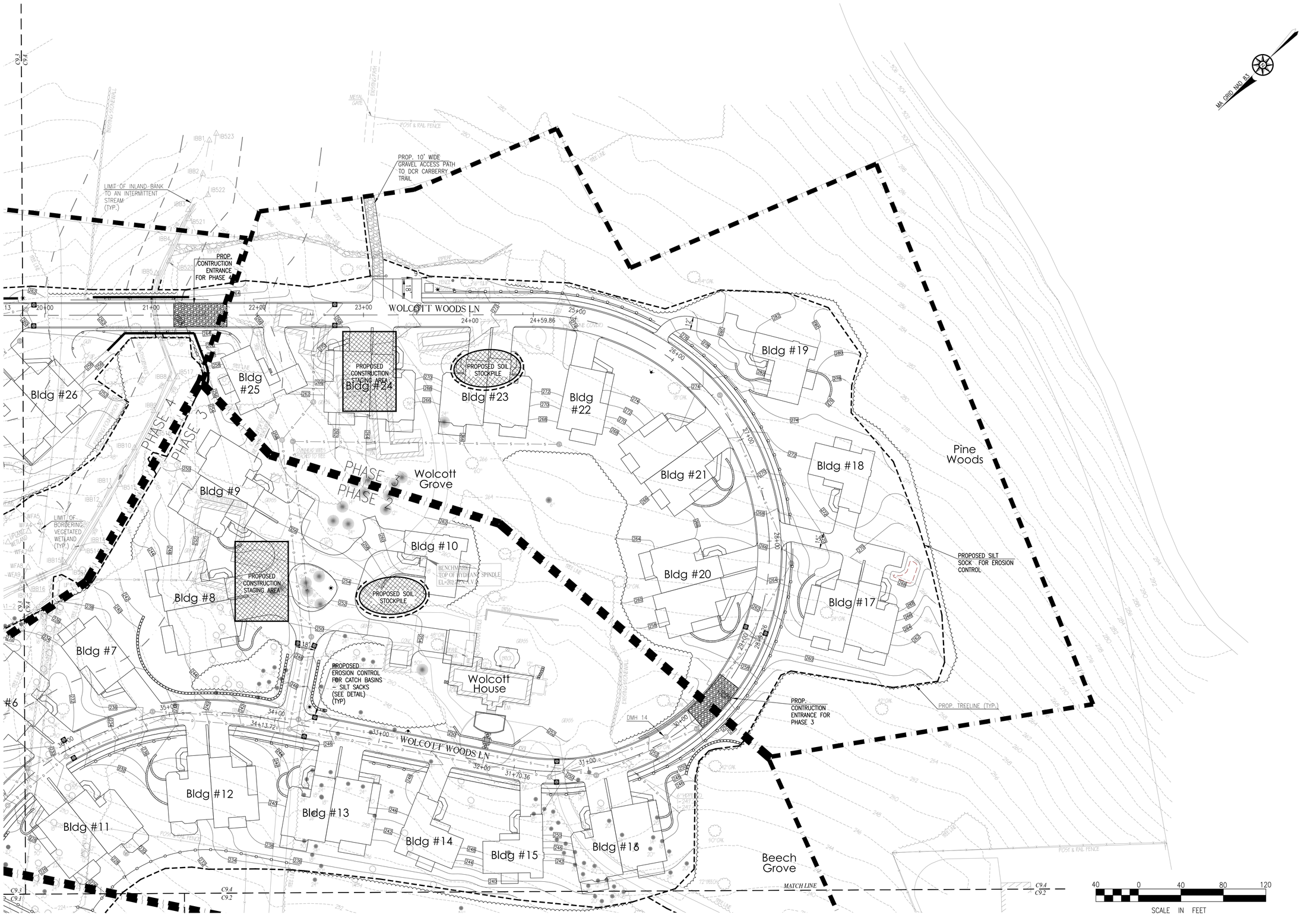

COPYRIGHT © BY MERRILL CORPORATION
NO PART OF THIS DOCUMENT MAY BE REPRODUCED, STORED IN A RETRIEVAL SYSTEM, OR TRANSMITTED IN ANY FORM OR BY ANY MEANS, ELECTRONIC, MECHANICAL, PHOTOCOPYING, RECORDING OR OTHERWISE, WITHOUT THE EXPRESS WRITTEN CONSENT OF MERRILL CORPORATION WITH THE EXCEPTION OF PRINTING ONE COPY FOR REVIEW AND APPROVAL PURPOSES BY THE OWNER AND HIS AGENTS. ANY REUSE OF THE DOCUMENTS FOR OTHER PROJECTS, EXTENSIONS TO THIS PROJECT, OR ANY MODIFICATIONS MADE TO THIS DOCUMENT WITHOUT THE EXPRESS WRITTEN CONSENT OF MERRILL CORPORATION SHALL RENDER IT UNUSABLE.

REVISIONS

KEY PLAN

COMMONWEALTH OF MASSACHUSETTS
DEBORAH W. KELLER
CIVIL
No. 45874
REGISTERED PROFESSIONAL ENGINEER

DRAWN BY: JG

DESIGNED BY: JG/DWK

CHECKED BY: DWK

Merrill
Engineers and Land Surveyors
427 COLUMBIA ROAD, HANOVER, MA 02339 / T: (781) 826-9200
26 UNION STREET, PLYMOUTH MA 02360 / T: (508) 746-6060
WWW.MERRILLINC.COM

SITE PLAN
WOLCOTT WOODS
MILTON, MASSACHUSETTS

PREPARED FOR: WOLCOTT RESIDENTIAL, LLC
80 BEHARRELL STREET, SUITE E
CONCORD, MASSACHUSETTS 01742

AUGUST 31, 2018

SCALE: 1" = 40'

JOB No. 16-079

LATEST REVISION:

CONSTRUCTION PHASING & EROSION CONTROL PLAN

SHEET C9.4

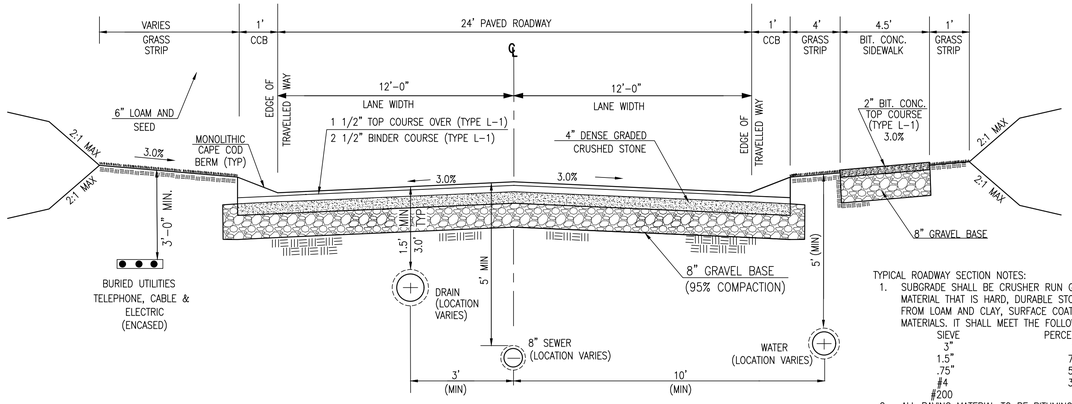

ROADWAY CROSS SECTION STA 1+64.09 TO 37+84.90

(NOT TO SCALE)

TYPICAL ROADWAY SECTION NOTES:

1. SUBGRADE SHALL BE CRUSHER RUN GRAVEL, CONSISTING OF INERT MATERIAL THAT IS HARD, DURABLE STONE, AND COURSE SAND, FREE FROM LOAM AND CLAY, SURFACE COATING AND DELETERIOUS MATERIALS. IT SHALL MEET THE FOLLOWING GRADATION.

SIEVE	PERCENT PASSING
3"	100
1.5"	70–100
.75"	50–85
#4	30–60
#200	0–12

2. ALL PAVING MATERIAL TO BE BITUMINOUS CONCRETE TYPE I–1 PER MASS DOT STANDARDS.
3. SURFACE COURSE IS NOT TO BE PAVED UNTIL THE BASE COURSE HAS BEEN THROUGH AT LEAST ONE (1) WINTER SEASON.
4. ALL WORK SHALL BE PERFORMED IN ACCORDANCE WITH SECTION 7.4.3 OF THE MILTON SUBDIVISION RULES AND REGULATIONS.

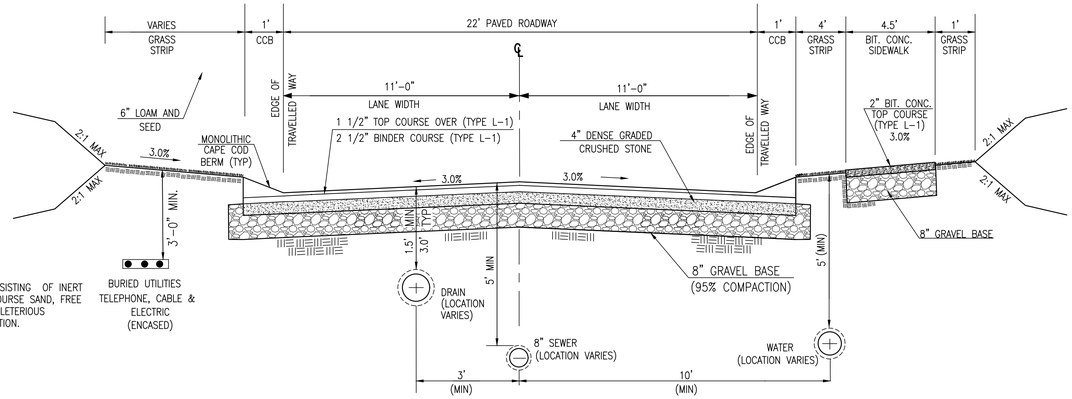

ROADWAY CROSS SECTION STA 1+64.09 TO 37+84.90

(NOT TO SCALE)

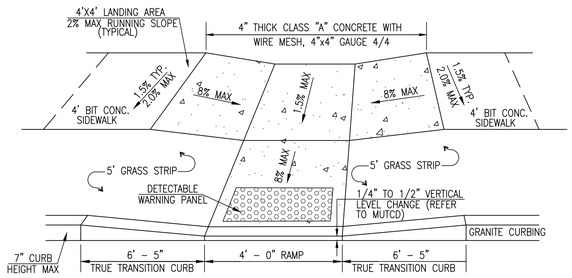

WHEELCHAIR RAMP DETAIL

(NOT TO SCALE)

NOTES:

1. DIMENSIONS SUBJECT TO CHANGE IN THE FIELD IF THE EXISTING CONDITIONS MAKE THE RAMP IMPRACTICAL, UNSAFE, OR ILLEGAL.
2. BROOM FINISH SURFACE AT RIGHT ANGLES TO DIRECTION OF TRAVEL.

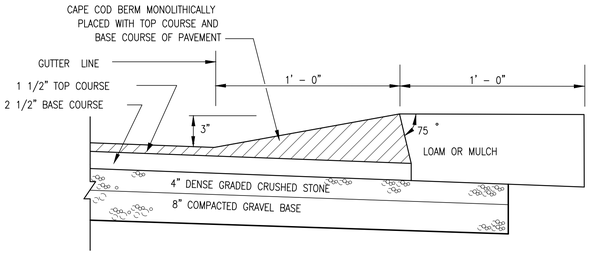

*IF THE IN–SITU MATERIAL IS TO BE USED FOR THE SUBBASE IT SHALL MEET THE MASS HIGHWAY SPEC. M1.03.0 TYPE b OR M2.01.7

MONOLITHIC BITUMINOUS CONCRETE BERM DETAIL (CAPE COD BERM)

(NOT TO SCALE)

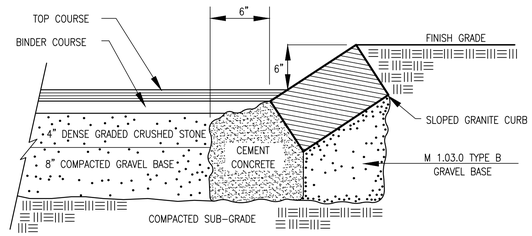

SLOPED GRANITE CURB DETAIL

(NOT TO SCALE)

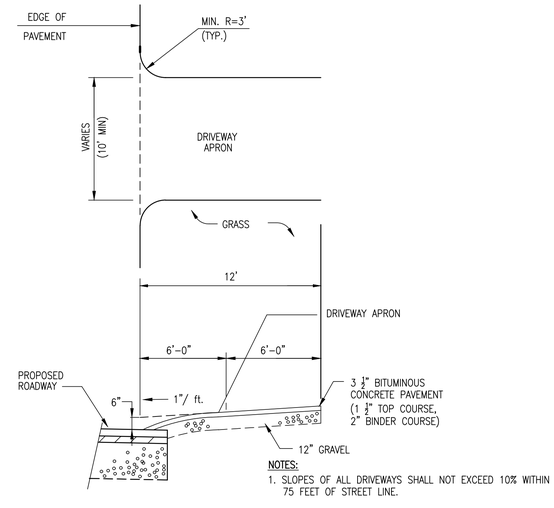

NOTES:

1. SLOPES OF ALL DRIVEWAYS SHALL NOT EXCEED 10% WITHIN 75 FEET OF STREET LINE.

DRIVEWAY APRON DETAIL

(NOT TO SCALE)

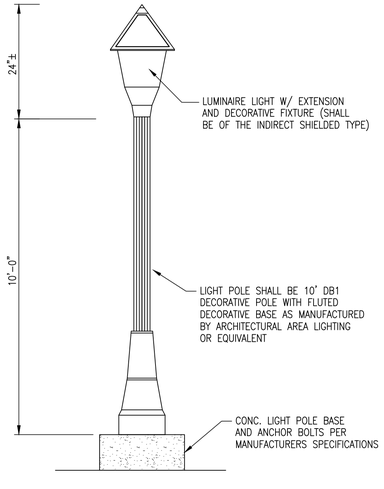

NOTE: ALL LIGHT SHALL BE REFLECTED DOWN TO PREVENT LIGHT POLLUTION AND SHALL BE DARK SKY COMPLIANT.

TYPICAL LIGHT POST DETAIL

(NOT TO SCALE)

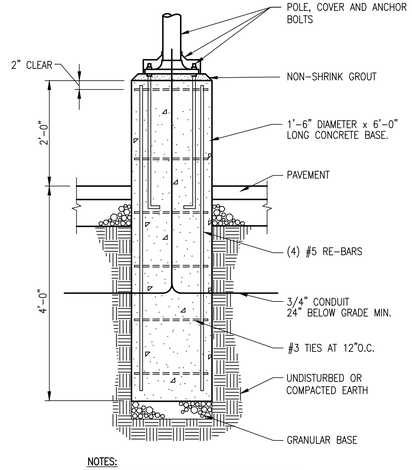

NOTES:

LIGHT POLE FOUNDATION DESIGN IS SUBJECT TO CHANGE BASED ON FINAL POLE AND FIXTURE SELECTION AND GEOTECHNICAL SITE INVESTIGATION.

LIGHT POLE FOUNDATION DETAIL

(NOT TO SCALE)

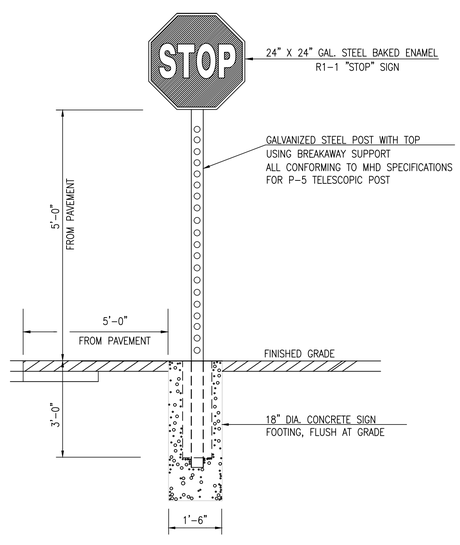

STOP SIGN DETAIL

(NOT TO SCALE)

REVISIONS

KEY PLAN

DEBORAH W. KELLIER CIVIL No. 45874 REGISTERED PROFESSIONAL ENGINEER COMMONWEALTH OF MASSACHUSETTS

DRAWN BY: JG

DESIGNED BY: JG/DWK

CHECKED BY: DWK

Merrill
Engineers and Land Surveyors
427 COLUMBIA ROAD, HANOVER, MA 02339 / T: (781) 826-9200
26 UNION STREET, PLYMOUTH MA 02360 / T: (508) 746-6060
WWW.MERRILLINC.COM

SITE PLAN
WOLCOTT WOODS
MILTON, MASSACHUSETTS

PREPARED FOR: WOLCOTT RESIDENTIAL, LLC
80 BEHARRELL STREET, SUITE E
CONCORD, MASSACHUSETTS 01742

AUGUST 31, 2018

SCALE: N.T.S.

JOB No. 16–079

LATEST REVISION:

CONSTRUCTION DETAILS

SHEET C10.1

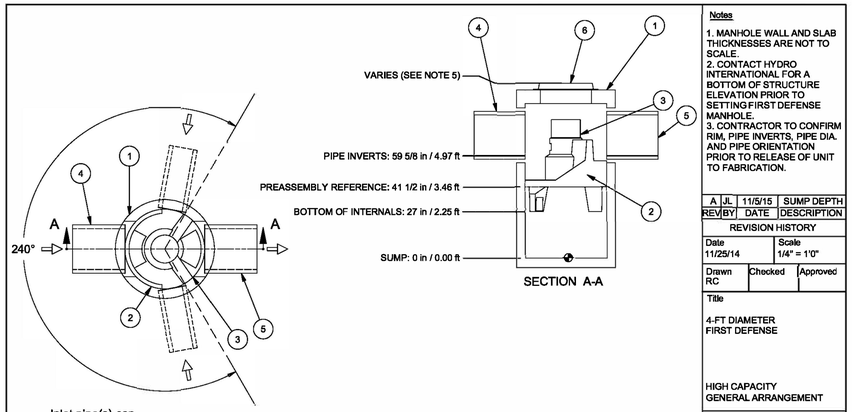

Notes

1. MANHOLE WALL AND SLAB THICKNESSES ARE NOT TO SCALE.
2. CONTACT HYDRO INTERNATIONAL FOR A BOTTOM OF STRUCTURE ELEVATION PRIOR TO SETTING FIRST DEFENSE MANHOLE.
3. CONTRACTOR TO CONFIRM RIM, PIPE INVERTS, PIPE DIA. AND PIPE ORIENTATION PRIOR TO RELEASE OF UNIT TO FABRICATION.

REV	BY	DATE	DESCRIPTION
A	JL	11/5/15	SUMP DEPTH

REVISION HISTORY

Date	Scale
11/25/14	1/4" = 1'0"

Drawn	Checked	Approved
RC		

Title

4-FT DIAMETER
FIRST DEFENSE

HIGH CAPACITY
GENERAL ARRANGEMENT

Parts List

ITEM	SIZE (in)	DESCRIPTION
1	48	I.D. PRECAST MANHOLE
2		LEDGER SUPPORT
3		SEPARATION MODULE
4	24	INLET PIPE (BY OTHERS)
5	24	OUTLET PIPE (BY OTHERS)
6	30	FRAME AND COVER (OR GRATE) (ROUND)

GENERAL NOTES:
1. General Arrangement drawings only. Contact Hydro International for site specific fabrication drawings.
2. The diameter of the inlet & outlet pipes may be no more than 24".
3. Multiple inlet pipes possible (refer to project plans).
4. Inlet/outlet pipe angle can vary to align with drainage network (refer to project plans).
5. Peak flow rate and minimum height limited by available cover and pipe diameter.
6. Larger sediment storage capacity may be provided with a deeper sump depth.

PRODUCT SPECIFICATIONS:
A. The treatment system shall use an induced vortex to separate pollutants from stormwater runoff.
B. The treatment system shall fit within the limits of excavation (area and depth) as shown in the project plans and will not exceed the dimensions for the design flow rates specified herein.
C. The treatment system shall remove greater than or equal to 90% of TSS based on the Target Particle Size (TPS) of 106 microns and/or 80% of TSS based on the TPS of 230 microns at 0.7 cfs and 1.2 cfs, respectively.
D. The treatment system shall convey the Peak On-line Flow Rates of up to 18 cfs without causing upstream surcharge conditions. Full-scale independent laboratory scour testing shall demonstrate effluent control of less than or equal to 5 mg/L for all flows up to 200% of MTFR-106.
E. The treatment system shall be capable of capturing and retaining fine silt and sand size particles. Analysis of captured sediment from full-scale field installations shall demonstrate particle sizes predominately in the 20-micron range

Hydro International

Stormwater Solutions
94 Hutchins Drive
Portland, Maine 04102
Tel: (207) 756-6200
Fax: (207) 756-6212
stormwaterinquiry@hydro-int.com

©2014 Hydro International

Any warranty made by Hydro International only applies to those items supplied by it. Hydro International does not accept and expressly disclaims any responsibility or liability for any structure, plant or equipment (or the performance thereof) designed, built, manufactured or supplied by any third-party. Hydro International has a policy of continuous product development and reserves the right to amend the specifications of any of its products or equipment at any time. Hydro International expressly disclaims any liability for the performance of its equipment (or any part thereof) used or made subject to conditions outside of the conditions set forth in Hydro International's design specifications. Hydro International owns the copyright in and to this drawing, which is supplied in confidence, and all intended recipients of the drawing, by their use thereof, agree to hold the drawing in confidence and not to use it for any purpose other than for which it was supplied and not reproduce, in whole or in part, the drawing or any of the equipment or structures depicted therein, without prior written permission of Hydro International.

CAD Ref: F4HC-MAX
Project No. XX-XXXX
Drawing No. F4HCS1 Rev. A

FIRST DEFENSE HIGH CAPACITY PRETREATMENT UNIT (FD-4HC)

(NOT TO SCALE)

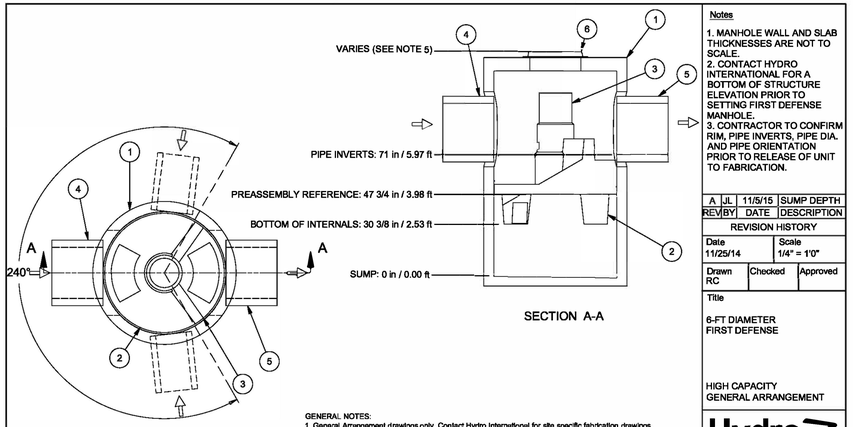

Notes

1. MANHOLE WALL AND SLAB THICKNESSES ARE NOT TO SCALE.
2. CONTACT HYDRO INTERNATIONAL FOR A BOTTOM OF STRUCTURE ELEVATION PRIOR TO SETTING FIRST DEFENSE MANHOLE.
3. CONTRACTOR TO CONFIRM RIM, PIPE INVERTS, PIPE DIA. AND PIPE ORIENTATION PRIOR TO RELEASE OF UNIT TO FABRICATION.

REV	BY	DATE	DESCRIPTION
A	JL	11/5/15	SUMP DEPTH

REVISION HISTORY

Date	Scale
11/25/14	1/4" = 1'0"

Drawn	Checked	Approved
RC		

Title

6-FT DIAMETER
FIRST DEFENSE

HIGH CAPACITY
GENERAL ARRANGEMENT

Parts List

ITEM	SIZE (in)	DESCRIPTION
1	72	I.D. PRECAST MANHOLE
2		LEDGER SUPPORT
3		SEPARATION MODULE
4	30	INLET PIPE (BY OTHERS)
5	30	OUTLET PIPE (BY OTHERS)
6	30	FRAME AND COVER (OR GRATE) (ROUND)

GENERAL NOTES:
1. General Arrangement drawings only. Contact Hydro International for site specific fabrication drawings.
2. The maximum diameter of the inlet & outlet pipes is 30". For pipes larger than 30", please contact Hydro International for additional design assistance.
3. Multiple inlet pipes possible (refer to project plans).
4. Inlet/outlet pipe angle can vary to align with drainage network (refer to project plans).
5. Peak flow rate and minimum height limited by available cover and pipe diameter.
6. Larger sediment storage capacity may be provided with a deeper sump depth.

PRODUCT SPECIFICATIONS:
A. The treatment system shall use an induced vortex to separate pollutants from stormwater runoff.
B. The treatment system shall fit within the limits of excavation (area and depth) as shown in the project plans and will not exceed the dimensions for the design flow rates specified herein.
C. The treatment system shall remove greater than or equal to 90% of TSS based on the Target Particle Size (TPS) of 106 Microns and/or 80% of TSS based on the TPS of 230 microns at 2.2 cfs and 3.6 cfs, respectively.
D. The treatment system shall convey the Peak On-line Flow Rates of up to 32 cfs without causing upstream surcharge conditions. Full-scale independent laboratory scour testing shall demonstrate effluent control of less than or equal to 5 mg/L for all flows up to 200% of MTFR-106.
E. The treatment system shall be capable of capturing and retaining fine silt and sand size particles. Analysis of captured sediment from full-scale field installations shall demonstrate particle sizes predominately in the 20-micron range

Hydro International

Stormwater Solutions
94 Hutchins Drive
Portland, Maine 04102
Tel: (207) 756-6200
Fax: (207) 756-6212
stormwaterinquiry@hydro-int.com

©2008 Hydro International

Any warranty made by Hydro International only applies to those items supplied by it. Hydro International does not accept and expressly disclaims any responsibility or liability for any structure, plant or equipment (or the performance thereof) designed, built, manufactured or supplied by any third-party. Hydro International has a policy of continuous product development and reserves the right to amend the specifications of any of its products or equipment at any time. Hydro International expressly disclaims any liability for the performance of its equipment (or any part thereof) used or made subject to conditions outside of the conditions set forth in Hydro International's design specifications. Hydro International owns the copyright in and to this drawing, which is supplied in confidence, and all intended recipients of the drawing, by their use thereof, agree to hold the drawing in confidence and not to use it for any purpose other than for which it was supplied and not reproduced, in whole or in part, the drawing or any of the equipment or structures depicted therein, without prior written permission of Hydro International.

CAD Ref: F6HC-MAX
Project No. XX-XXXX
Drawing No. F6HCS1 Rev. A

FIRST DEFENSE HIGH CAPACITY PRETREATMENT UNIT (FD-6HC)

(NOT TO SCALE)

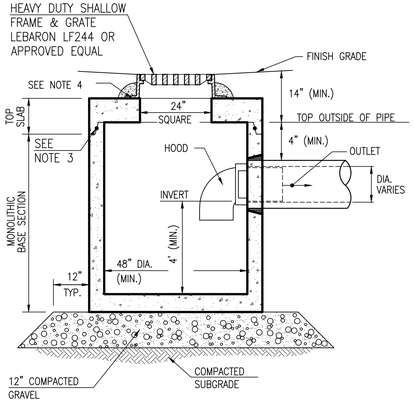

NOTES:

1. ALL SECTIONS SHALL BE DESIGNED FOR HS-20 LOADING.
2. PROVIDE "V" KNOCKOUTS FOR PIPES WITH 2" MAX. CLEARANCE TO OUTSIDE OF PIPE. MORTAR ALL PIPE CONNECTIONS.
3. JOINT SEALANT BETWEEN PRECAST SECTIONS SHALL BE PREFORMED BUTYL RUBBER.
4. CATCH BASIN FRAME AND GRATE (4" DEPTH) SHALL BE SET IN FULL MORTAR BED.
5. ADJUST TO FINISH GRADE WITH CLAY BRICK AND MORTAR AS REQUIRED.

PRECAST CATCH BASIN (SHALLOW COVER) DETAIL

(NOT TO SCALE)

(NOT TO SCALE)

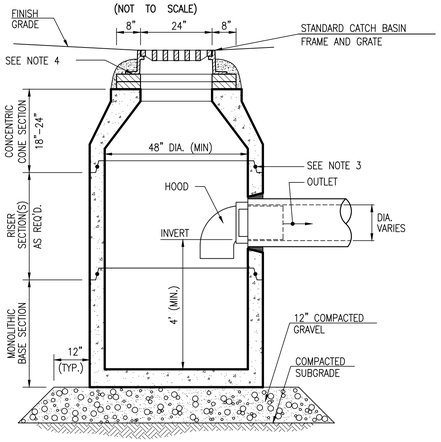

NOTES:

1. ALL SECTIONS SHALL BE DESIGNED FOR HS-20 LOADING.
2. PROVIDE "V" KNOCKOUTS FOR PIPES WITH 2" MAX. CLEARANCE TO OUTSIDE OF PIPE. MORTAR ALL PIPE CONNECTIONS.
3. JOINT SEALANT BETWEEN PRECAST SECTIONS SHALL BE PREFORMED BUTYL RUBBER.
4. CATCH BASIN FRAME AND GRATE SHALL BE SET IN FULL MORTAR BED. ADJUST TO GRADE WITH CLAY BRICK AND MORTAR (2 BRICK COURSES TYPICALLY, 5 BRICK COURSES MAXIMUM)

PRECAST CATCH BASIN DETAIL

(NOT TO SCALE)

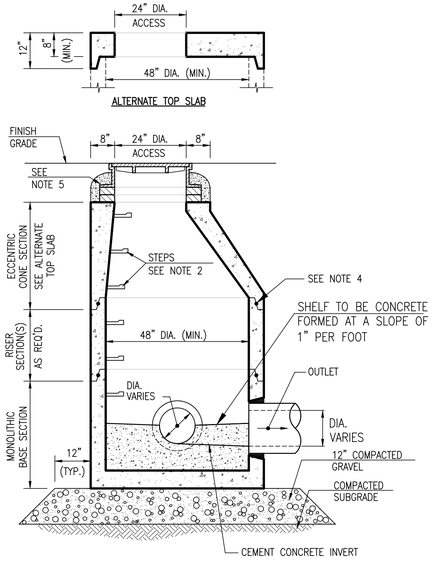

NOTES:

1. ALL SECTIONS SHALL BE DESIGNED FOR HS-20 LOADING.
2. COPOLYMER MANHOLE STEPS SHALL BE INSTALLED AT 12" O.C. FOR THE FULL DEPTH OF THE STRUCTURE.
3. PROVIDE "V" KNOCKOUTS FOR PIPES WITH 2" MAX. CLEARANCE TO OUTSIDE OF PIPE. MORTAR ALL PIPE CONNECTIONS.
4. JOINT SEALANT BETWEEN PRECAST SECTIONS SHALL BE PREFORMED BUTYL RUBBER.
5. DRAIN MANHOLE FRAME AND COVER SHALL BE SET IN FULL MORTAR BED. ADJUST TO GRADE WITH CLAY BRICK AND MORTAR (2 BRICK COURSES TYPICALLY, 5 BRICK COURSES MAXIMUM)

PRECAST CONCRETE MANHOLE DETAIL

(NOT TO SCALE)

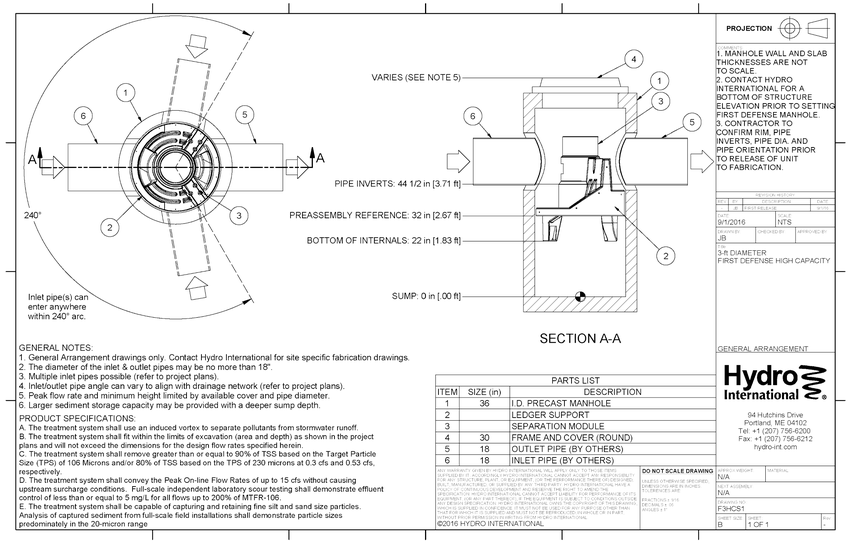

PROJECTION

1. MANHOLE WALL AND SLAB THICKNESSES ARE NOT TO SCALE.
2. CONTACT HYDRO INTERNATIONAL FOR A BOTTOM OF STRUCTURE ELEVATION PRIOR TO SETTING FIRST DEFENSE MANHOLE.
3. CONTRACTOR TO CONFIRM RIM, PIPE INVERTS, PIPE DIA. AND PIPE ORIENTATION PRIOR TO RELEASE OF UNIT TO FABRICATION.

REV	BY	DATE	DESCRIPTION

REVISION HISTORY

Date	Scale
9/1/2016	NTS

DRAWN BY:	CHECKED BY:	APPROVED BY:
JB		

3-ft DIAMETER
FIRST DEFENSE HIGH CAPACITY

GENERAL ARRANGEMENT

Parts List

ITEM	SIZE (in)	DESCRIPTION
1	36	I.D. PRECAST MANHOLE
2		LEDGER SUPPORT
3		SEPARATION MODULE
4	30	FRAME AND COVER (ROUND)
5	18	OUTLET PIPE (BY OTHERS)
6	18	INLET PIPE (BY OTHERS)

GENERAL NOTES:
1. General Arrangement drawings only. Contact Hydro International for site specific fabrication drawings.
2. The diameter of the inlet & outlet pipes may be no more than 18".
3. Multiple inlet pipes possible (refer to project plans).
4. Inlet/outlet pipe angle can vary to align with drainage network (refer to project plans).
5. Peak flow rate and minimum height limited by available cover and pipe diameter.
6. Larger sediment storage capacity may be provided with a deeper sump depth.

PRODUCT SPECIFICATIONS:
A. The treatment system shall use an induced vortex to separate pollutants from stormwater runoff
B. The treatment system shall fit within the limits of excavation (area and depth) as shown in the project plans and will not exceed the dimensions for the design flow rates specified herein.
C. The treatment system shall remove greater than or equal to 90% of TSS based on the Target Particle Size (TPS) of 106 Microns and/or 80% of TSS based on the TPS of 230 microns at 0.3 cfs and 0.53 cfs, respectively.
D. The treatment system shall convey the Peak On-line Flow Rates of up to 15 cfs without causing upstream surcharge conditions. Full-scale independent laboratory scour testing shall demonstrate effluent control of less than or equal to 5 mg/L for all flows up to 200% of MTFR-106.
E. The treatment system shall be capable of capturing and retaining fine silt and sand size particles. Analysis of captured sediment from full-scale field installations shall demonstrate particle sizes predominately in the 20-micron range

Hydro International

94 Hutchins Drive
Portland, ME 04102
Tel: +1 (207) 756-6200
Fax: +1 (207) 756-6212
hydro-int.com

DO NOT SCALE DRAWING	WEIGHT	MATERIAL
UNLESS OTHERWISE SPECIFIED: DIMENSIONS ARE IN INCHES. TOLERANCES ARE: FRACTIONS ± 1/16 DECIMALS X ± .06 ANGLES ± 1°	N/A	
	NEXT ASSEMBLY	
	N/A	
	DRAWING NO.	
	F3HCS1	
	SHEET SIZE	SHEET
	B	1 OF 1

©2016 HYDRO INTERNATIONAL

FIRST DEFENSE HIGH CAPACITY PRETREATMENT UNIT (FD-3HC)

(NOT TO SCALE)

COPYRIGHT © BY MERRILL CORPORATION
NO PART OF THIS DOCUMENT MAY BE REPRODUCED, STORED IN A RETRIEVAL SYSTEM, OR TRANSMITTED IN ANY FORM OR BY ANY MEANS, ELECTRONIC, MECHANICAL, PHOTOCOPYING, RECORDING OR OTHERWISE, WITHOUT THE EXPRESS WRITTEN CONSENT OF MERRILL CORPORATION WITH THE EXCEPTION OF ANY REGULATORY AUTHORITY WHICH MAY REPRODUCE IT IN CONJUNCTION WITH THE PERFORMANCE OF OFFICIAL BUSINESS UNDER ITS JURISDICTION. ANY MODIFICATIONS MADE TO THIS DOCUMENT WITHOUT THE EXPRESS WRITTEN CONSENT OF MERRILL CORPORATION SHALL RENDER IT UNUSABLE.

REVISIONS

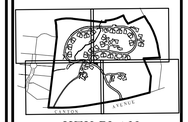

KEY PLAN

COMMONWEALTH OF MASSACHUSETTS
DEBORAH W. KELLER
CIVIL
No. 45874
REGISTERED PROFESSIONAL ENGINEER

DRAWN BY: JG

DESIGNED BY: JG/DWK

CHECKED BY: DWK

Merrill
Engineers and Land Surveyors
427 COLUMBIA ROAD, HANOVER, MA 02339 / T: (781) 826-9200
26 UNION STREET, PLYMOUTH MA 02360 / T: (508) 746-6060
WWW.MERRILLINC.COM

SITE PLAN
WOLCOTT WOODS
MILTON, MASSACHUSETTS
PREPARED FOR: WOLCOTT RESIDENTIAL, LLC
80 BEHARRELL STREET, SUITE E
CONCORD, MASSACHUSETTS 01742

AUGUST 31, 2018

SCALE: N.T.S.

JOB No. 16-079

LATEST REVISION:

CONSTRUCTION DETAILS

SHEET C10.2

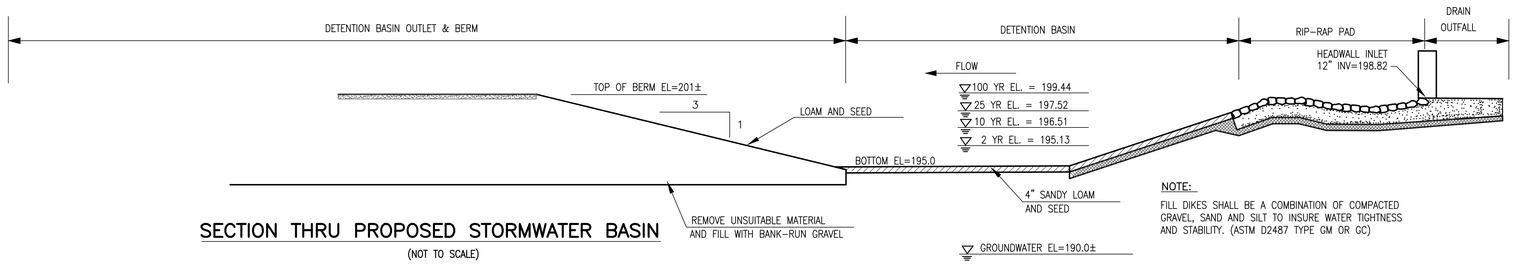

SECTION THRU PROPOSED STORMWATER BASIN

(NOT TO SCALE)

NOTE:

FILL DIKES SHALL BE A COMBINATION OF COMPACTED GRAVEL, SAND AND SILT TO INSURE WATER TIGHTNESS AND STABILITY. (ASTM D2487 TYPE GM OR GC)

STORMWATER BASIN NOTES

1. AFTER FINAL GRADE OF BASIN IS ESTABLISHED CONTRACTOR SHALL PREVENT CONSTRUCTION TRAFFIC OVER ALL INFILTRATION SURFACES.
2. CONTRACTOR SHALL NOT DISCHARGE SEDIMENT-LADEN WATER INTO STORMWATER BASIN.
3. STORMWATER BASIN SHALL NOT BE PLACED INTO OPERATION PRIOR TO INSTALLATION OF PAVEMENT AND STABILIZATION OF ALL SURFACES CONTRIBUTING TO CLOSED DRAINAGE SYSTEM.
4. EXCAVATE ALL MATERIAL BELOW INFILTRATION BASIN TO SAND LAYER (SEE SOIL LOGS) AND REPLACE WITH CLEAN COARSE SAND IN ACCORDANCE WITH 310 CMR 15.255.

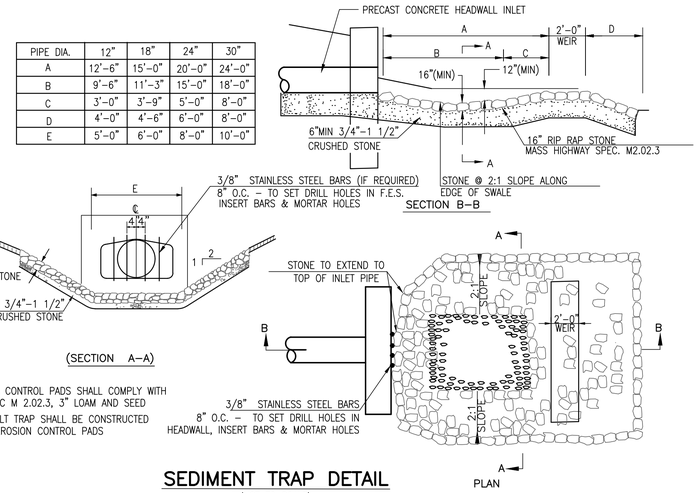

PIPE DIA.	12"	18"	24"	30"
A	12'-6"	15'-0"	20'-0"	24'-0"
B	9'-6"	11'-3"	15'-0"	18'-0"
C	3'-0"	3'-9"	5'-0"	8'-0"
D	4'-0"	4'-6"	6'-0"	8'-0"
E	5'-0"	6'-0"	8'-0"	10'-0"

NOTES:

1. STONE FOR EROSION CONTROL PADS SHALL COMPLY WITH MDPW MATERIAL SPEC M 2.02.3, 3" LOAM AND SEED
2. STONE BERM FOR SILT TRAP SHALL BE CONSTRUCTED AROUND SIDES OF EROSION CONTROL PADS

SEDIMENT TRAP DETAIL

(NOT TO SCALE)

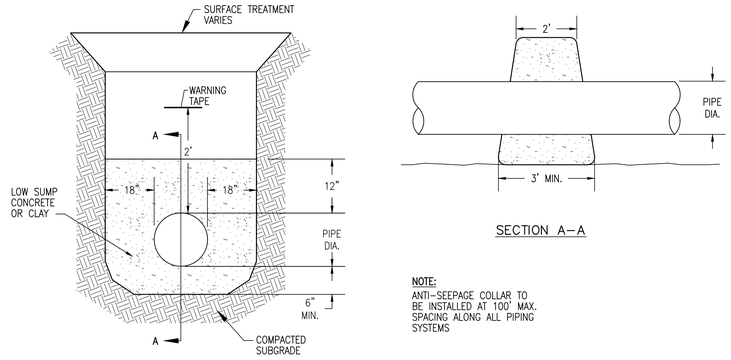

NOTE:

ANTI-SEEPAGE COLLAR TO BE INSTALLED AT 100' MAX. SPACING ALONG ALL PIPING SYSTEMS

ANTI-SEEPAGE COLLAR DETAIL

(NOT TO SCALE)

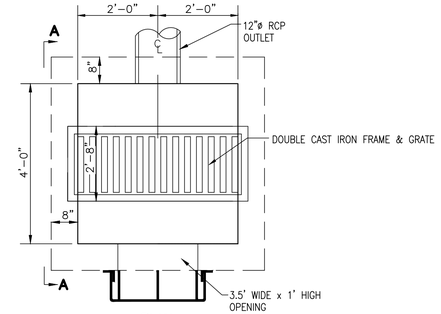

PLAN

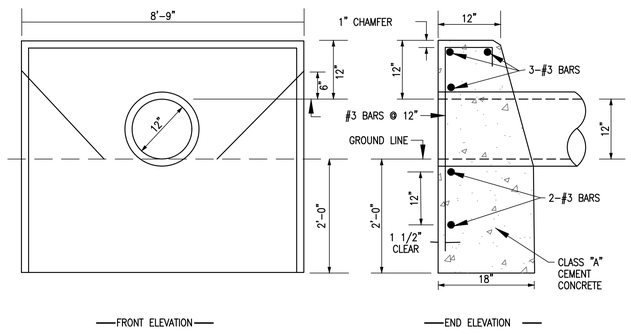

NOTES:

1. FOR ADDITIONAL DETAIL SEE MASS HIGHWAY CONSTRUCTION STANDARD 206.6.0.
2. CONCRETE SHALL BE CLASS A, 4,000 PSI (MIN).
3. INSTALL IMPERMEABLE TRENCH DAM ANTI-SEEP COLLAR AROUND DRAIN PIPE PRIOR TO HEADWALL LOCATION.
4. SAFETY BARS SHALL BE SET TO CREATE EQUAL OPENING DIMENSIONS.

PRECAST CONCRETE HEADWALL DETAIL

(NOT TO SCALE)

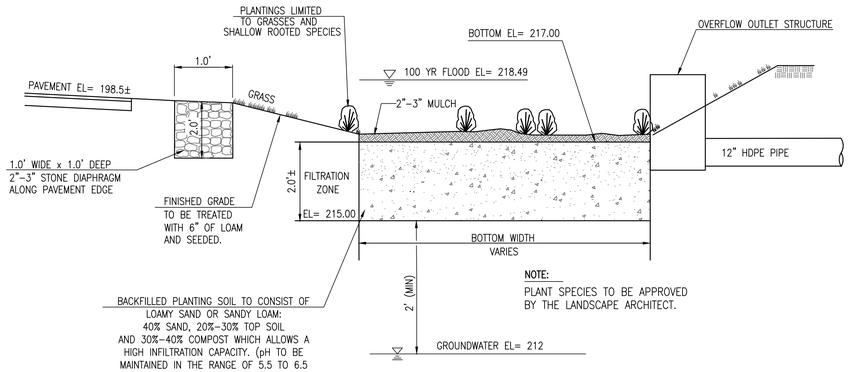

NOTE:

PLANT SPECIES TO BE APPROVED BY THE LANDSCAPE ARCHITECT.

OPERATIONS AND MAINTENANCE

PRE CONSTRUCTION:

CONTRACTOR TO PREVENT SEDIMENT FROM CLOGGING ANY EXPOSED SUBGRADE TO MINIMIZE COMP ACTION BY CONSTRUCTION VEHICLES IN AREA OF STORMWATER MANAGEMENT. NO DISCHARGE FROM DEWATERING ACTIVITIES SHALL ENTER STORMWATER MANAGEMENT AREAS. NO STORMWATER DISCHARGE SHALL BE DIRECTED ONTO INFILTRATIVE SURFACES UNTIL CONTRIBUTING AREAS ARE STABILIZED.

POST CONSTRUCTION:

UNTIL VEGETATION HAS BEEN ESTABLISHED, MONTHLY INSPECTIONS ARE RECOMMENDED. ONCE VEGETATION HAS BEEN ESTABLISHED, THE BIO-RETENTION BASE SHALL BE INSPECTED ON AN ANNUAL BASIS. MAINTENANCE SHOULD CONSIST NORMALLY OF REMOVAL OF DEBRIS (PRIMARILY AT THE INFLOW POINT) AND ACCUMULATED SEDIMENT. DURING THE GROWTH SEASON THE GRASS SIDE SLOPES SHALL BE MOWED AT LEAST ONCE A MONTH. OTHER MAINTENANCE TASKS INCLUDE REPLACEMENT OF DEAD VEGETATION, EROSION REPAIR AND pH REGULATION (USUALLY ADDING LIME).

BIO-RETENTION DETAIL

(NOT TO SCALE)

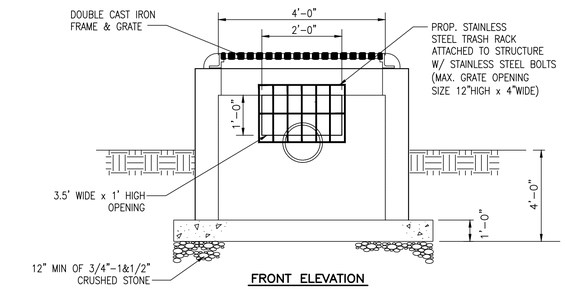

FRONT ELEVATION

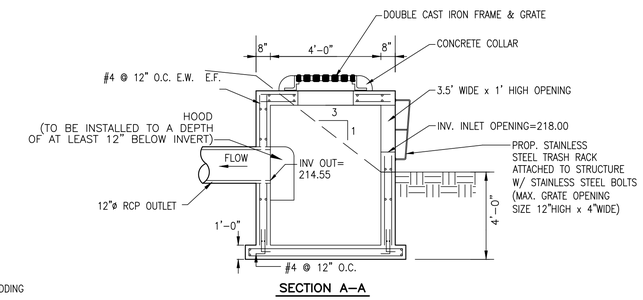

SECTION A-A

OVERFLOW OUTLET STRUCTURE

(NOT TO SCALE)

COPYRIGHT © BY MERRILL CORPORATION
NO PART OF THIS DOCUMENT MAY BE REPRODUCED, STORED IN A RETRIEVAL SYSTEM, OR TRANSMITTED IN ANY FORM OR BY ANY MEANS, ELECTRONIC, MECHANICAL, PHOTOCOPYING, RECORDING OR OTHERWISE, WITHOUT THE EXPRESS WRITTEN CONSENT OF MERRILL CORPORATION WITH THE EXCEPTION OF ANY REGULATORY AUTHORITY WHICH MAY REPRODUCE IT IN CONJUNCTION WITH THE PERFORMANCE OF OFFICIAL BUSINESS UNDER ITS JURISDICTION. ANY MODIFICATIONS MADE TO THIS DOCUMENT WITHOUT THE EXPRESS WRITTEN CONSENT OF MERRILL CORPORATION SHALL RENDER IT UNUSABLE.

REVISIONS

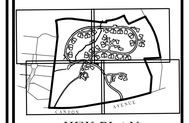

KEY PLAN

COMMONWEALTH OF MASSACHUSETTS
DEBORAH W. KELLER
CIVIL
No. 45874
REGISTERED PROFESSIONAL ENGINEER

DRAWN BY: JG

DESIGNED BY: JG/DWK

CHECKED BY: DWK

Merrill
Engineers and Land Surveyors
427 COLUMBIA ROAD, HANOVER, MA 02339 / T: (781) 826-9200
26 UNION STREET, PLYMOUTH MA 02360 / T: (508) 746-6060
WWW.MERRILLINC.COM

SITE PLAN
WOLCOTT WOODS
MILTON, MASSACHUSETTS

PREPARED FOR: WOLCOTT RESIDENTIAL, LLC
80 BEHARRELL STREET, SUITE E
CONCORD, MASSACHUSETTS 01742

AUGUST 31, 2018

SCALE: N.T.S.

JOB No. 16-079

LATEST REVISION:

CONSTRUCTION DETAILS

SHEET C10.3

ACCEPTABLE FILL MATERIALS: STORMTECH SC-740 CHAMBER SYSTEMS

MA□ER□AL L□CA□□□		DESCR□□□□□	AAS□□□ MA□ER□AL CLASS□□CA□□□S	C□M□AC□□□ □DE□S□□ RE□□□REME□□
D	**FINAL FILL:** □□LL MA□ER□AL □□R LA□ER 'D' S□AR□S □R□M □□E □□□ □□ □□E 'C' LA□ER □□ □□E □□□□□M □□ □LE□□LE □A□EME□□ □R □□□A□ED □□□S□ED □RADE A□□□E□□□□E □□A□ □A□EME□□ S□□□ASE MA□ □E □AR□ □□ □□E 'D' LA□ER	A□□ S□□L□R□C□ MA□ER□ALS□□A□□E S□□LS□□R □ER E□□□□EER'S □LA□S□C□EC□ □LA□S □□R □A□EME□□ S□□□RADE RE□□□REME□□S□	□□A	□RE□ARE □ER S□□E DES□□□ E□□□□EER'S □LA□S□ □A□ED □□S□ALLA□□□□S MA□ □A□E S□R□□□E□□ MA□ER□AL A□D □RE□ARA□□□□ RE□□□REME□□S□
C	**INITIAL FILL:** □□LL MA□ER□AL □□R LA□ER 'C' S□AR□S □R□M □□E □□□ □□ □□E EM□EDME□□ S□□□E □□' LA□ER□□□ 18" □4□0 □□□A□□□E □□E □□□ □□ □□E C□AM□ER□□□□E □□A□ □A□EME□□ S□□□ASE MA□ □E A □AR□ □□ □□E 'C' LA□ER□	□RA□□LAR □ ELL-□RADED S□□L□A□□RE□A□E M□□□RES□□□□□ □□□ES □R □R□CESSED A□□RE□A□E□ M□S□ □A□EME□□ S□□□ASE MA□ER□ALS CA□ □E □SED □□ L□E□ □□ □□□S LA□ER□	AAS□□□ M14□¹ A-1□A-□-4□A-□ □R AAS□□□ M4□¹ □□□□□□4□46□□□□□6□□□□6□6□□68□□□□8□8□8□□□10	□E□□□ C□M□AC□□□□S A□□ER 1□" □□00 □□□□□ MA□ER□AL □□ER □□E C□AM□ERS □S REAC□ED□ C□M□AC□ ADD□□□□AL LA□ERS □□ 6" □1□0 □□□□MA□ L□□□S □□ A M□□□□□□ □R□C□□R DE□S□□□ □□R □ ELL □RADED MA□ER□AL A□D □□□ RELA□□□E DE□S□□□ □□R □R□CESSED A□□RE□A□E MA□ER□ALS□R□LLER □R□SS □E□□CLE □ E□□□□ □□□ □□ E□CEED 1□□000 □□ □□□ □□□D□□AM□C □□RCE □□□ □□ E□CEED □0□000 □□□□8□ □□□
□	**EMBEDMENT STONE:** □□LL S□RR□□□D□□□ □□E C□AM□ERS □R□M □□E □□□□DA□□□□ S□□□E □A' LA□ER□□□ □□E 'C' LA□ER A□□□E□	CLEA□□CR□S□ED□A□□□LAR S□□□E	AAS□□□ M4□¹ □□□□□□4□46□□□□□6□□□	□□ C□M□AC□□□□ RE□□□RED□
A	**FOUNDATION STONE:** □□LL □EL□□ C□AM□ERS □R□M □□E S□□□RADE □□ □□ □□E □□□□ □□□□□□M□ □□ □□E C□AM□ER□	CLEA□□CR□S□ED□A□□□LAR S□□□E	AAS□□□ M4□¹ □□□□□□4□46□□□□□6□□□	□LA□E C□M□AC□ □R R□LL □□ AC□□E□E A □LA□ SURFACE. ² ³

PLEASE NOTE:
1. THE LISTED AASHTO DESIGNATIONS ARE FOR GRADATIONS ONLY. THE STONE MUST ALSO BE CLEAN, CRUSHED, ANGULAR. FOR EXAMPLE, A SPECIFICATION FOR #4 STONE WOULD STATE: "CLEAN, CRUSHED, ANGULAR NO. 4 (AASHTO M43) STONE".
2. STORMTECH COMPACTION REQUIREMENTS ARE MET FOR 'A' LOCATION MATERIALS WHEN PLACED AND COMPACTED IN 6" (150 mm) (MAX) LIFTS USING TWO FULL COVERAGES WITH A VIBRATORY COMPACTOR.
3. WHERE INFILTRATION SURFACES MAY BE COMPROMISED BY COMPACTION, FOR STANDARD DESIGN LOAD CONDITIONS, A FLAT SURFACE MAY BE ACHIEVED BY RAKING OR DRAGGING WITHOUT COMPACTION EQUIPMENT. FOR SPECIAL LOAD DESIGNS, CONTACT STORMTECH FOR COMPACTION REQUIREMENTS.

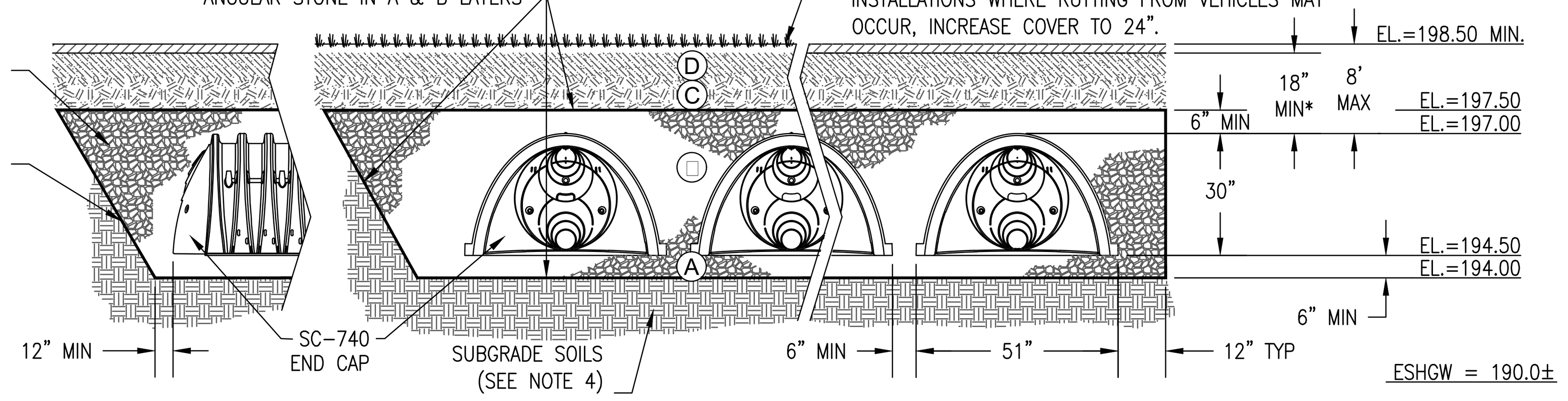

NOTES:

1. SC-740 CHAMBERS SHALL CONFORM TO THE REQUIREMENTS OF ASTM F2418 "STANDARD SPECIFICATION FOR POLYPROPYLENE (PP) CORRUGATED WALL STORMWATER COLLECTION CHAMBERS", OR ASTM F2922 "STANDARD SPECIFICATION FOR POLYETHYLENE (PE) CORRUGATED WALL STORMWATER COLLECTION CHAMBERS".
2. SC-740 CHAMBERS SHALL BE DESIGNED IN ACCORDANCE WITH ASTM F2787 "STANDARD PRACTICE FOR STRUCTURAL DESIGN OF THERMOPLASTIC CORRUGATED WALL STORMWATER COLLECTION CHAMBERS".
3. "ACCEPTABLE FILL MATERIALS" TABLE ABOVE PROVIDES MATERIAL LOCATIONS, DESCRIPTIONS, GRADATIONS, AND COMPACTION REQUIREMENTS FOR FOUNDATION, EMBEDMENT, AND FILL MATERIALS.
4. THE SITE DESIGN ENGINEER IS RESPONSIBLE FOR ASSESSING THE BEARING RESISTANCE (ALLOWABLE BEARING CAPACITY) OF THE SUBGRADE SOILS AND THE DEPTH OF FOUNDATION STONE WITH CONSIDERATION FOR THE RANGE OF EXPECTED SOIL MOISTURE CONDITIONS.
5. PERIMETER STONE MUST BE EXTENDED HORIZONTALLY TO THE EXCAVATION WALL FOR BOTH VERTICAL AND SLOPED EXCAVATION WALLS.
6. ONCE LAYER 'C' IS PLACED, ANY SOIL/MATERIAL CAN BE PLACED IN LAYER 'D' UP TO THE FINISHED GRADE. MOST PAVEMENT SUBBASE SOILS CAN BE USED TO REPLACE THE MATERIAL REQUIREMENTS OF LAYER 'C' OR 'D' AT THE SITE DESIGN ENGINEER'S DISCRETION.

SC-740 INFILTRATION CHAMBER SYSTEM DETAIL
3 ROWS OF 6 CHAMBERS (POND 9P)
(NOT TO SCALE)

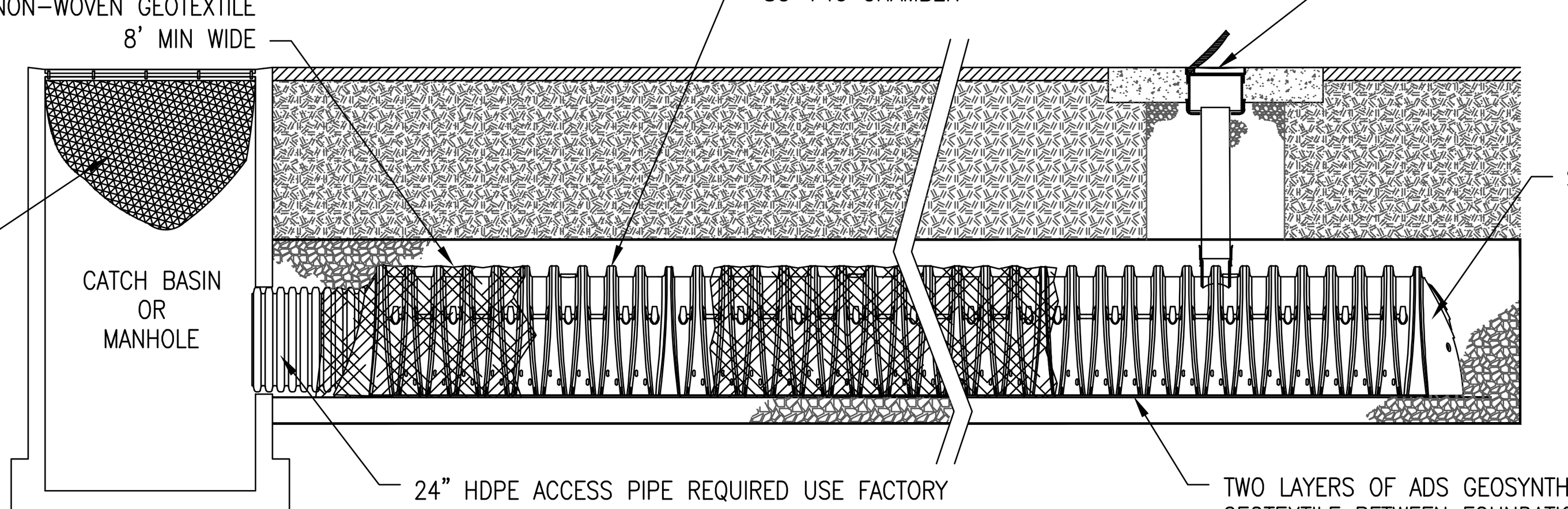

SC-740 ISOLATOR ROW DETAIL
(NOT TO SCALE)

INSPECTION & MAINTENANCE

STEP 1) INSPECT ISOLATOR ROW FOR SEDIMENT
- A. INSPECTION PORTS (IF PRESENT)
  - A.1. REMOVE/OPEN LID ON NYLOPLAST INLINE DRAIN
  - A.2. REMOVE AND CLEAN FLEXSTORM FILTER IF INSTALLED
  - A.3. USING A FLASHLIGHT AND STADIA ROD, MEASURE DEPTH OF SEDIMENT AND RECORD ON MAINTENANCE LOG
  - A.4. LOWER A CAMERA INTO ISOLATOR ROW FOR VISUAL INSPECTION OF SEDIMENT LEVELS (OPTIONAL)
  - A.5. IF SEDIMENT IS AT, OR ABOVE, 3" (80 mm) PROCEED TO STEP 2. IF NOT, PROCEED TO STEP 3.
- B. ALL ISOLATOR ROWS
  - B.1. REMOVE COVER FROM STRUCTURE AT UPSTREAM END OF ISOLATOR ROW
  - B.2. USING A FLASHLIGHT, INSPECT DOWN THE ISOLATOR ROW THROUGH OUTLET PIPE
    - i) MIRRORS ON POLES OR CAMERAS MAY BE USED TO AVOID A CONFINED SPACE ENTRY
    - ii) FOLLOW OSHA REGULATIONS FOR CONFINED SPACE ENTRY IF ENTERING MANHOLE
  - B.3. IF SEDIMENT IS AT, OR ABOVE, 3" (80 mm) PROCEED TO STEP 2. IF NOT, PROCEED TO STEP 3.

STEP 2) CLEAN OUT ISOLATOR ROW USING THE JETVAC PROCESS
- A. A FIXED CULVERT CLEANING NOZZLE WITH REAR FACING SPREAD OF 45" (1.1 m) OR MORE IS PREFERRED
- B. APPLY MULTIPLE PASSES OF JETVAC UNTIL BACKFLUSH WATER IS CLEAN
- C. VACUUM STRUCTURE SUMP AS REQUIRED

STEP 3) REPLACE ALL COVERS, GRATES, FILTERS, AND LIDS; RECORD OBSERVATIONS AND ACTIONS.
STEP 4) INSPECT AND CLEAN BASINS AND MANHOLES UPSTREAM OF THE STORMTECH SYSTEM.

NOTES
1. INSPECT EVERY 6 MONTHS DURING THE FIRST YEAR OF OPERATION. ADJUST THE INSPECTION INTERVAL BASED ON PREVIOUS OBSERVATIONS OF SEDIMENT ACCUMULATION AND HIGH WATER ELEVATIONS.
2. CONDUCT JETTING AND VACTORING ANNUALLY OR WHEN INSPECTION SHOWS THAT MAINTENANCE IS NECESSARY.

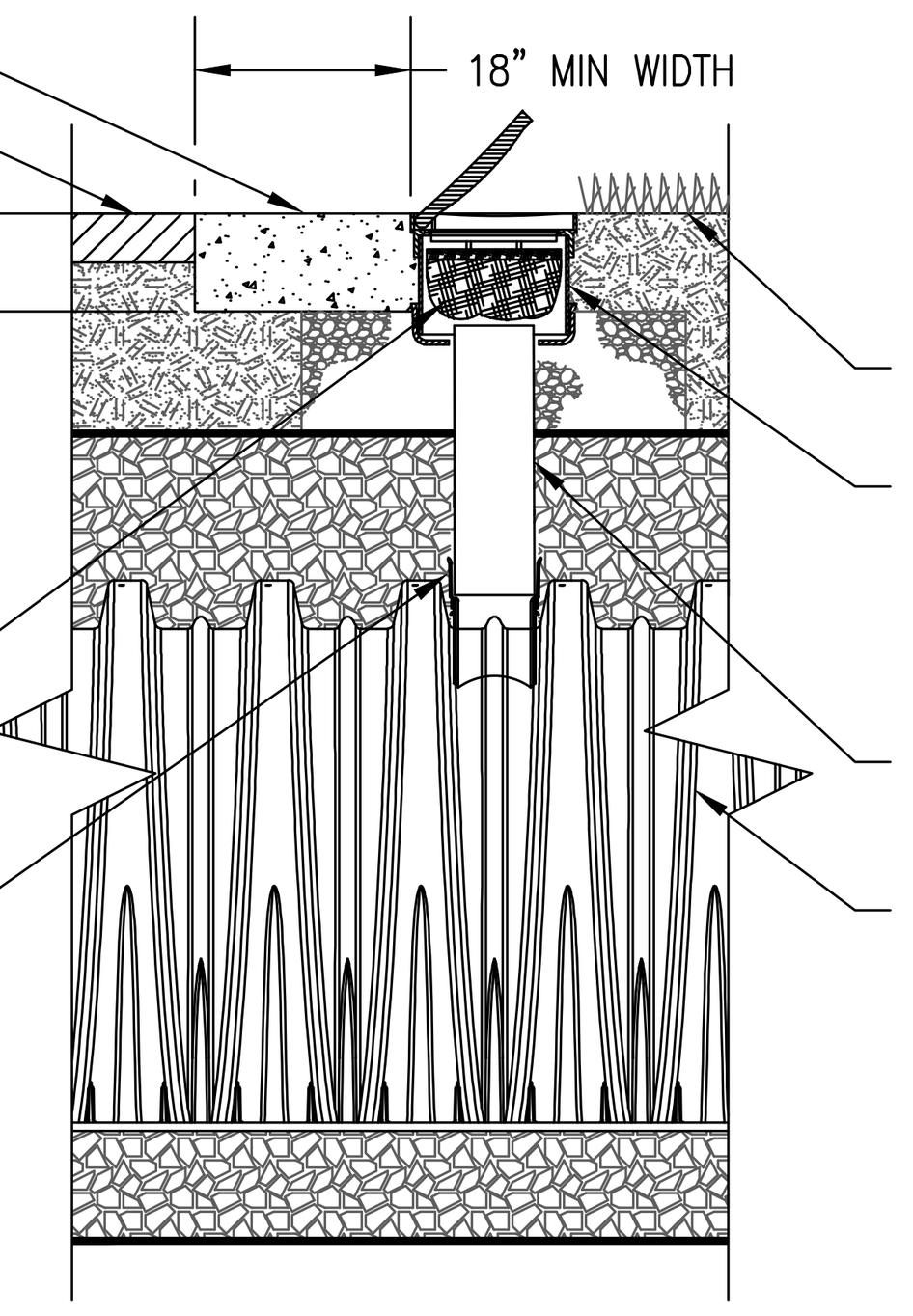

* THE PART# □□1□A□6□□□□ CAN BE USED TO ORDER ALL NECESSARY COMPONENTS FOR A SOLID LID INSPECTION PORT INSTALLATION

6" INSPECTION PORT DETAIL
(NOT TO SCALE)

ACCEPTABLE FILL MATERIALS: STORMTECH MC-3500 CHAMBER SYSTEMS

MA□ER□AL L□CA□□□		DESCR□□□□□	AAS□□□ MA□ER□AL CLASS□□CA□□□S	C□M□AC□□□ □DE□S□□ RE□□□REME□□
D	**FINAL FILL:** □□LL MA□ER□AL □□R LA□ER 'D' S□AR□S □R□M □□E □□□ □□ □□E 'C' LA□ER □□ □□E □□□□□M □□ □LE□□LE □A□EME□□ □R □□□A□ED □□□S□ED □RADE A□□□E□□□□E □□A□ □A□EME□□ S□□□ASE MA□ □E □AR□ □□ □□E 'D' LA□ER	A□□ S□□L□R□C□ MA□ER□ALS□□A□□E S□□LS□□R □ER E□□□□EER'S □LA□S□C□EC□ □LA□S □□R □A□EME□□ S□□□RADE RE□□□REME□□S□	□□A	□RE□ARE □ER S□□E DES□□□ E□□□□EER'S □LA□S□ □A□ED □□S□ALLA□□□□S MA□ □A□E S□R□□□E□□ MA□ER□AL A□D □RE□ARA□□□□ RE□□□REME□□S□
C	**INITIAL FILL:** □□LL MA□ER□AL □□R LA□ER 'C' S□AR□S □R□M □□E □□□ □□ □□E EM□EDME□□ S□□□E □□' LA□ER□□□ □4" □600 □□□A□□□E □□E □□□ □□ □□E C□AM□ER□□□□E □□A□ □A□EME□□ S□□□ASE MA□ □E A □AR□ □□ □□E 'C' LA□ER□	□RA□□LAR □ ELL-□RADED S□□L□A□□RE□A□E M□□□RES□□□□□ □□□ES □R □R□CESSED A□□RE□A□E□ M□S□ □A□EME□□ S□□□ASE MA□ER□ALS CA□ □E □SED □□ L□E□ □□ □□□S LA□ER□	AAS□□□ M14□¹ A-1□A-□-4□A-□ □R AAS□□□ M4□¹ □□□□□□4□46□□□□□6□□□□6□6□□68□□□□8□8□8□□□10	□E□□□ C□M□AC□□□□S A□□ER □4" □600 □□□□□ MA□ER□AL □□ER □□E C□AM□ERS □S REAC□ED□ C□M□AC□ ADD□□□□AL LA□ERS □□ 1□" □□00 □□□ MA□ L□□□S □□ A M□□□□□□ □R□C□□R DE□S□□□ □□R □ ELL □RADED MA□ER□AL A□D □□□ RELA□□□E DE□S□□□ □□R □R□CESSED A□□RE□A□E MA□ER□ALS□
□	**EMBEDMENT STONE:** □□LL S□RR□□□D□□□ □□E C□AM□ERS □R□M □□E □□□□DA□□□□ S□□□E □A' LA□ER□□□ □□E 'C' LA□ER A□□□E□	CLEA□□CR□S□ED□A□□□LAR S□□□E	AAS□□□ M4□¹ □□4	□□ C□M□AC□□□□ RE□□□RED□
A	**FOUNDATION STONE:** □□LL □EL□□ C□AM□ERS □R□M □□E S□□□RADE □□ □□ □□E □□□□ □□□□□□M□ □□ □□E C□AM□ER□	CLEA□□CR□S□ED□A□□□LAR S□□□E	AAS□□□ M4□¹ □□4	□LA□E C□M□AC□ □R R□LL □□ AC□□E□E A □LA□ SURFACE. ² ³

PLEASE NOTE:
1. THE LISTED AASHTO DESIGNATIONS ARE FOR GRADATIONS ONLY. THE STONE MUST ALSO BE CLEAN, CRUSHED, ANGULAR. FOR EXAMPLE, A SPECIFICATION FOR #4 STONE WOULD STATE: "CLEAN, CRUSHED, ANGULAR NO. 4 (AASHTO M43) STONE".
2. STORMTECH COMPACTION REQUIREMENTS ARE MET FOR 'A' LOCATION MATERIALS WHEN PLACED AND COMPACTED IN 9" (230 mm) (MAX) LIFTS USING TWO FULL COVERAGES WITH A VIBRATORY COMPACTOR.
3. WHERE INFILTRATION SURFACES MAY BE COMPROMISED BY COMPACTION, FOR STANDARD DESIGN LOAD CONDITIONS, A FLAT SURFACE MAY BE ACHIEVED BY RAKING OR DRAGGING WITHOUT COMPACTION EQUIPMENT. FOR SPECIAL LOAD DESIGNS, CONTACT STORMTECH FOR COMPACTION REQUIREMENTS.

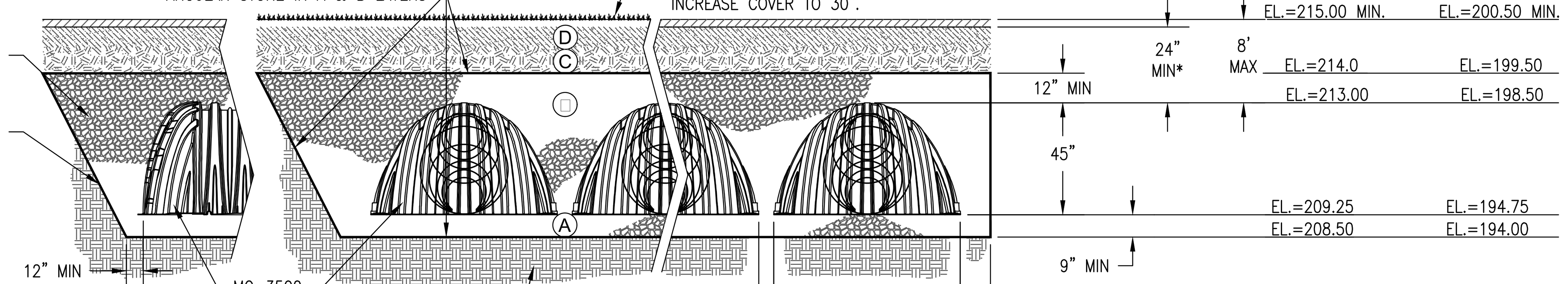

NOTES:

1. MC-3500 CHAMBERS SHALL CONFORM TO THE REQUIREMENTS OF ASTM F2418 "STANDARD SPECIFICATION FOR POLYPROPYLENE (PP) CORRUGATED WALL STORMWATER COLLECTION CHAMBERS".
2. MC-3500 CHAMBERS SHALL BE DESIGNED IN ACCORDANCE WITH ASTM F2787 "STANDARD PRACTICE FOR STRUCTURAL DESIGN OF THERMOPLASTIC CORRUGATED WALL STORMWATER COLLECTION CHAMBERS".
3. "ACCEPTABLE FILL MATERIALS" TABLE ABOVE PROVIDES MATERIAL LOCATIONS, DESCRIPTIONS, GRADATIONS, AND COMPACTION REQUIREMENTS FOR FOUNDATION, EMBEDMENT, AND FILL MATERIALS.
4. THE SITE DESIGN ENGINEER IS RESPONSIBLE FOR ASSESSING THE BEARING RESISTANCE (ALLOWABLE BEARING CAPACITY) OF THE SUBGRADE SOILS AND THE DEPTH OF FOUNDATION STONE WITH CONSIDERATION FOR THE RANGE OF EXPECTED SOIL MOISTURE CONDITIONS.
5. PERIMETER STONE MUST BE EXTENDED HORIZONTALLY TO THE EXCAVATION WALL FOR BOTH VERTICAL AND SLOPED EXCAVATION WALLS.
6. ONCE LAYER 'C' IS PLACED, ANY SOIL/MATERIAL CAN BE PLACED IN LAYER 'D' UP TO THE FINISHED GRADE. MOST PAVEMENT SUBBASE SOILS CAN BE USED TO REPLACE THE MATERIAL REQUIREMENTS OF LAYER 'C' OR 'D' AT THE SITE DESIGN ENGINEER'S DISCRETION.

MC-3500 INFILTRATION CHAMBER SYSTEM DETAIL
12 ROWS OF 26 CHAMBERS (POND 6P)
13 ROWS OF 21 CHAMBERS (POND 7P)
(NOT TO SCALE)

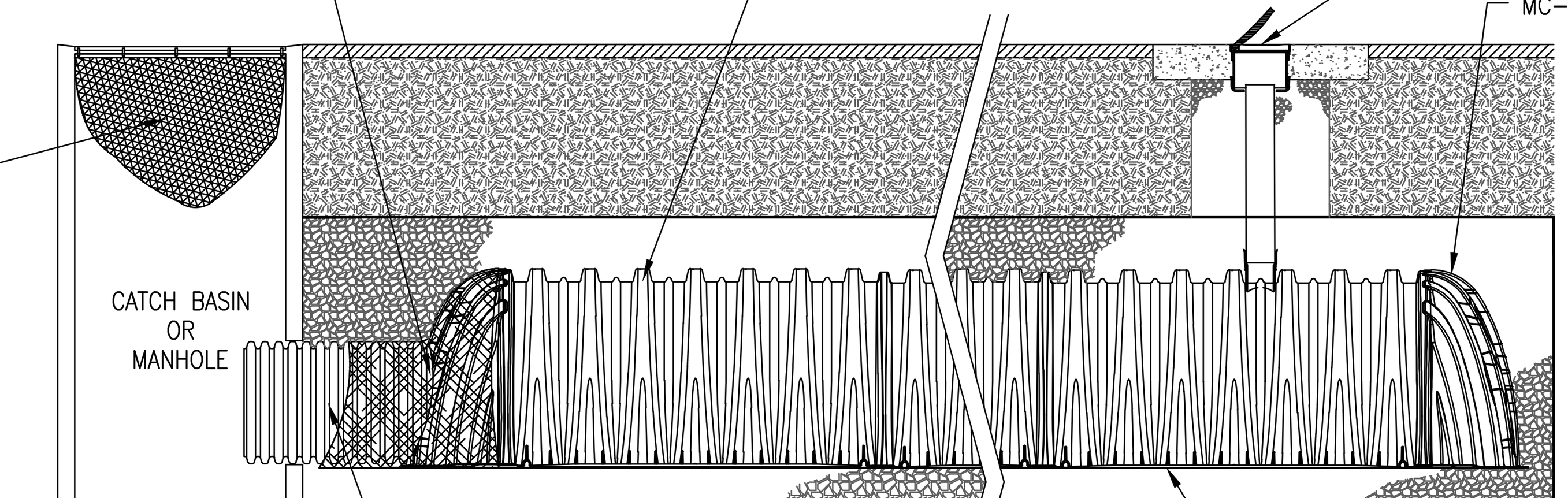

MC-3500 ISOLATOR ROW DETAIL
(NOT TO SCALE)

COPYRIGHT © BY MERRILL CORPORATION
NO PART OF THIS DOCUMENT MAY BE REPRODUCED, STORED IN A RETRIEVAL SYSTEM, OR TRANSMITTED IN ANY FORM OR BY ANY MEANS, ELECTRONIC, MECHANICAL, PHOTOCOPYING, RECORDING OR OTHERWISE, WITHOUT THE EXPRESS WRITTEN CONSENT OF MERRILL CORPORATION WITH THE EXCEPTION OF ANY REGULATORY AUTHORITY WHICH MAY REPRODUCE IT IN CONJUNCTION WITH THE PERFORMANCE OF OFFICIAL BUSINESS UNDER ITS JURISDICTION. ANY MODIFICATIONS MADE TO THIS DOCUMENT WITHOUT THE EXPRESS WRITTEN CONSENT OF MERRILL CORPORATION SHALL RENDER IT UNUSABLE.

REVISIONS

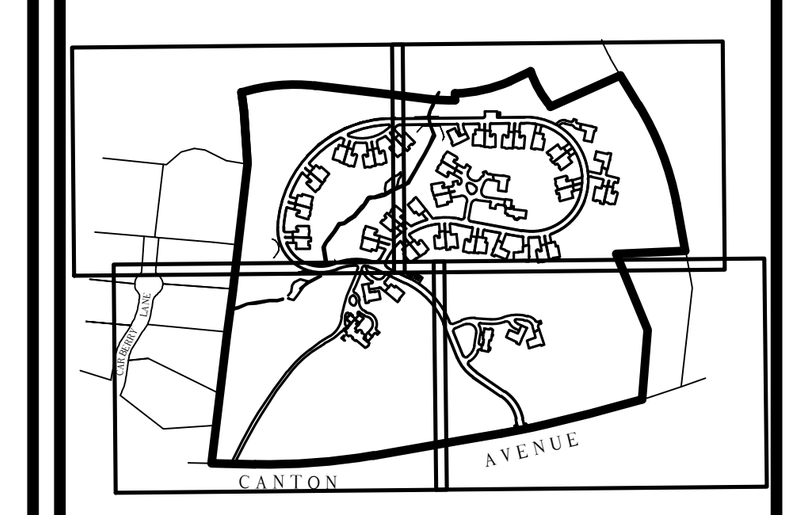

KEY PLAN

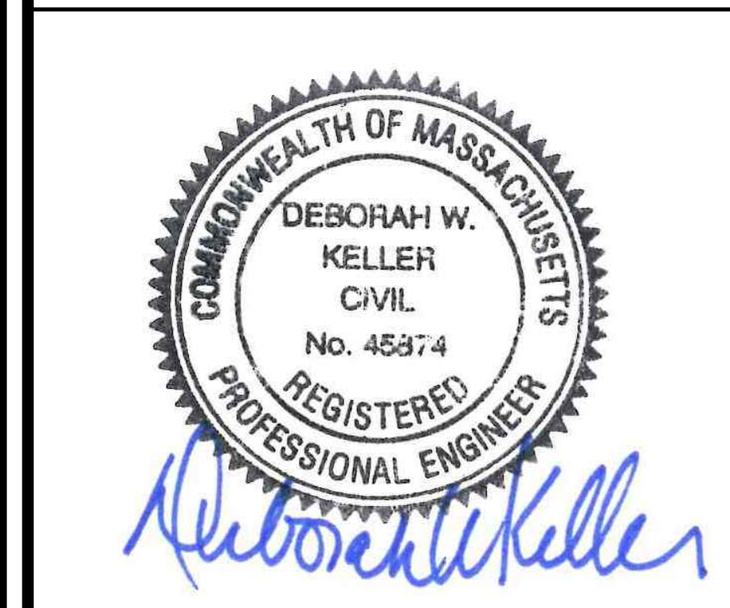

DRAWN BY: JG

DESIGNED BY: JG/DWK

CHECKED BY: DWK

Merrill
Engineers and Land Surveyors
427 COLUMBIA ROAD, HANOVER, MA 02339 / T: (781) 826-9200
26 UNION STREET, PLYMOUTH MA 02360 / T: (508) 746-6060
WWW.MERRILLINC.COM

SITE PLAN
WOLCOTT WOODS
MILTON, MASSACHUSETTS

PREPARED FOR: WOLCOTT RESIDENTIAL, LLC
80 BEHARRELL STREET, SUITE E
CONCORD, MASSACHUSETTS 01742

AUGUST 31, 2018

SCALE: N.T.S.

JOB No. 16-079

LATEST REVISION:

CONSTRUCTION DETAILS

SHEET C10.4

NOTE:

1. TAPPING SADDLES ARE NOT ALLOWED FOR MAIN-ON-MAIN TAPS.
2. USE MUELLER OR AMERICAN DARLING DUCTILE IRON OR 316 STAINLESS STEEL TAPPING SLEEVES FOR TAP SIZES 4" - 24".
3. USE 316 STAINLESS STEEL TAPPING SLEEVES BY DRESSER OR CASCADE FOR TAPS ON MAINS 30" AND GREATER.
4. BOLTS AND NUTS FOR ALL TAPPING SLEEVES SHALL BE 316 SS.
5. USE THRUST BLOCKING ONLY FOR WET TAPS UNLESS OTHERWISE APPROVED BY CPW.
6. DEPTH FROM GROUND SURFACE TO TOP OF BLOCKING SHALL BE GREATER THAN HEIGHT OF BLOCKING.
7. THE END OF THE TAPPING SLEEVE SHALL BE NO CLOSER THAN 4 FEET TO A JOINT.

TAP SIZE	DIMENSIONS IN FT		
	W	H	D
4" & 6"	2.0	1.4	1.0
8"	3.5	2.0	1.4
10"	4.0	2.5	1.8
12"	5.0	3.0	2.5

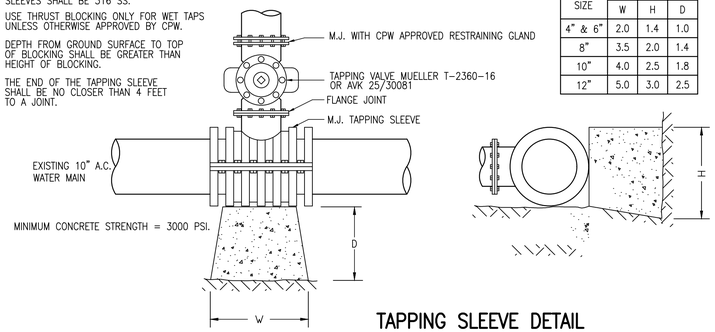

TAPPING SLEEVE DETAIL

(NOT TO SCALE)

* CONSULT DPW PRIOR TO PURCHASING ANY WATER MAIN MATERIALS. COMPLETE INSTALLATION IN ACCORDANCE TO DPW REQUIREMENTS

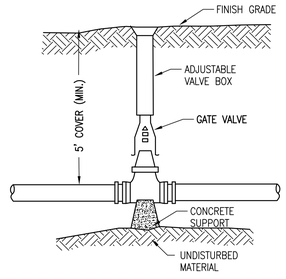

NOTE: ALL VALVES SHALL OPEN RIGHT

WATER GATE DETAIL

(NOT TO SCALE)

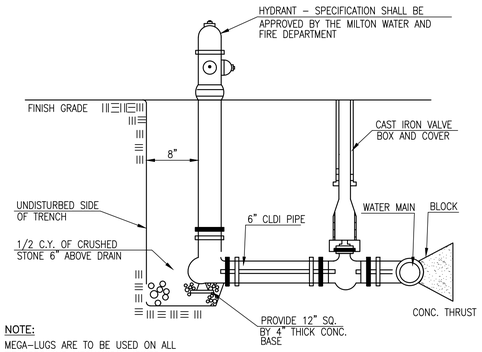

NOTE:
MEGA-LUGS ARE TO BE USED ON ALL TIE RODS AND MECHANICAL JOINTS

HYDRANT DETAIL

(NOT TO SCALE)

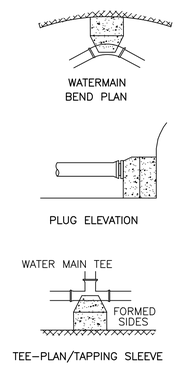

PRECAST CONCRETE BLOCK PLACED AGAINST UNDISTURBED MATERIAL AND OR STONE (LARGE DIAMETER)

NOTE:

1.CONCRETE FOR THRUST BLOCKS SHALL HAVE A MINIMUM COMPRESSIVE STRENGTH OF 1500 P.S.I. AT 28 DAYS

2.THRUST BLOCK BEARING AREAS TO BE IN ACCORDANCE WITH TABLE BELOW, UNLESS DETERMINED OTHERWISE BY THE ENGINEER BECAUSE OF SOIL CONDITIONS.

3.NO CONCRETE SHALL BE POURED IN PLACE WITHOUT APPROVAL OF ENGINEER.

TABLE OF BEARING AREAS (S.F.)			
SIZE OF MAIN(IN)	90° BEND	TEES & PLUGS	45° BEND
8	5	4	3

THRUST BLOCK DETAILS

(NOT TO SCALE)

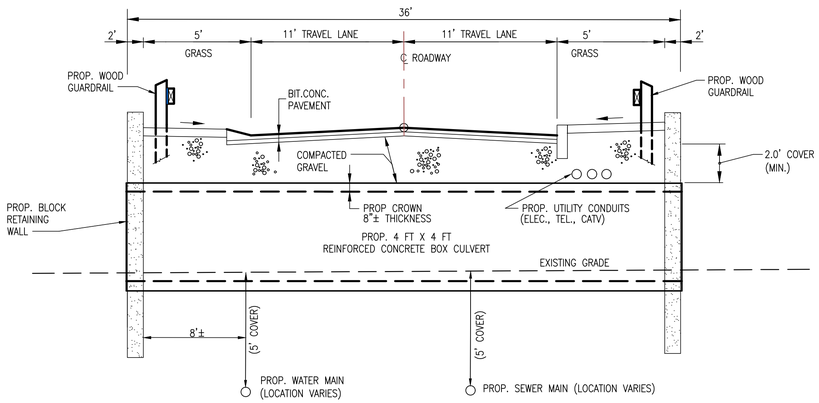

PRECAST CONCRETE BOX CULVERT SECTION DETAIL

(NOT TO SCALE)

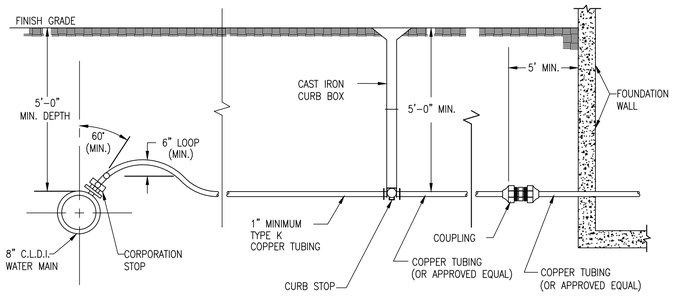

NOTE:
VERIFY MATERIALS AND TAPPING AND INSTALLATION REQUIREMENTS WITH THE TOWN OF MILTON WATER DEPARTMENT.

WATER SERVICE DETAIL

(NOT TO SCALE)

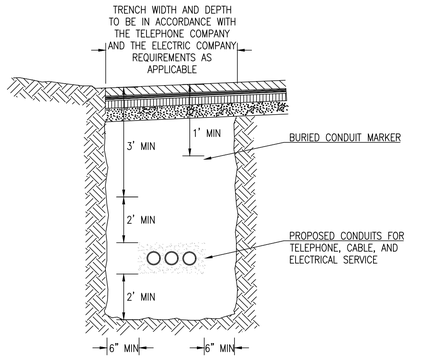

TYPICAL ELECTRIC/TELEPHONE/CABLE CONDUIT (US-UTILITY SERVICE) DETAIL

(NOT TO SCALE)

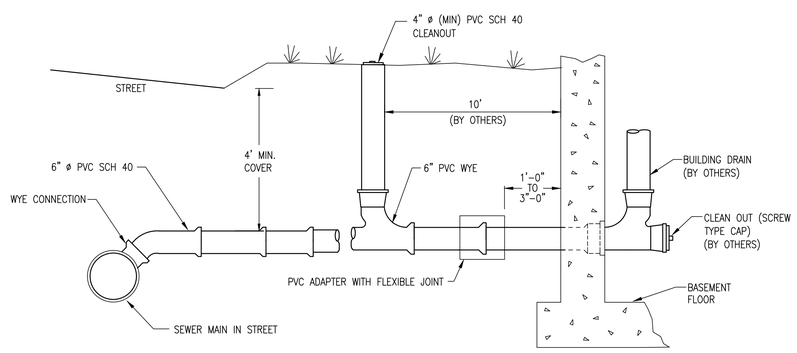

HOUSE SEWER: MINIMUM SLOPE 1/4" PER FOOT

TYPICAL BUILDING SEWER CONNECTION DETAIL

(NOT TO SCALE)

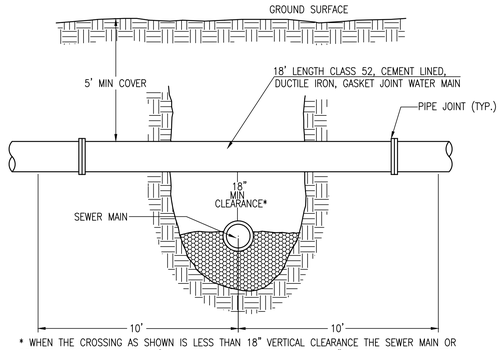

* WHEN THE CROSSING AS SHOWN IS LESS THAN 18" VERTICAL CLEARANCE THE SEWER MAIN OR SERVICE MUST BE ENCASED 10' ON BOTH SIDES OF CROSSING WITH 6" OF 3000 PSI CONCRETE IF THE SEWER MAIN OR SERVICE CROSSES ABOVE THE WATERMAIN OR SERVICE TOTAL ENCASEMENT, BOTH SIDES OF THE CROSSING IS REQUIRED, REGARDLESS OF SEPARATION.

TYPICAL WATER CROSSING DETAIL

(NOT TO SCALE)

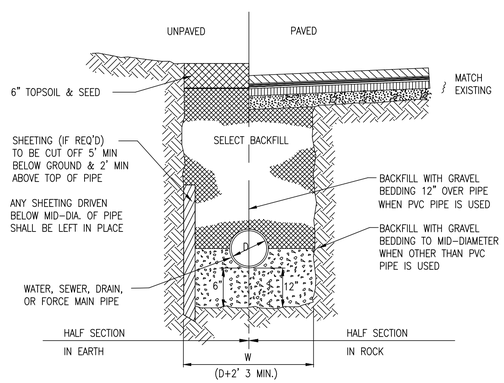

TYPICAL UTILITY TRENCH DETAIL

(NOT TO SCALE)

COPYRIGHT © BY MERRILL CORPORATION
NO PART OF THIS DOCUMENT MAY BE REPRODUCED, STORED IN A RETRIEVAL SYSTEM, OR TRANSMITTED IN ANY FORM OR BY ANY MEANS, ELECTRONIC, MECHANICAL, PHOTOCOPYING, RECORDING, OR OTHERWISE, WITHOUT THE EXPRESS WRITTEN CONSENT OF MERRILL CORPORATION WITH THE EXCEPTION OF A REASONABLE NUMBER OF PRINTS FOR USE BY THE OWNER IN THE NORMAL COURSE OF BUSINESS RELATED TO THIS PROJECT. ANY UNAUTHORIZED REPRODUCTION, ANY MODIFICATIONS MADE TO THIS DOCUMENT WITHOUT THE EXPRESS WRITTEN CONSENT OF MERRILL CORPORATION SHALL RENDER IT UNUSABLE.

REVISIONS

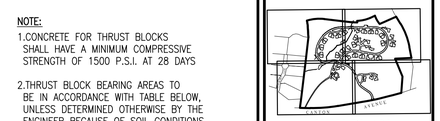

KEY PLAN

DEBORAH W. KELLER CIVIL No. 45874 REGISTERED PROFESSIONAL ENGINEER COMMONWEALTH OF MASSACHUSETTS

DRAWN BY: JG

DESIGNED BY: JG/DWK

CHECKED BY: DWK

Merrill
Engineers and Land Surveyors
427 COLUMBIA ROAD, HANOVER, MA 02339 / T: (781) 826-9200
26 UNION STREET, PLYMOUTH MA 02360 / T: (508) 746-6060
WWW.MERRILLINC.COM

SITE PLAN
WOLCOTT WOODS
MILTON, MASSACHUSETTS

PREPARED FOR: WOLCOTT RESIDENTIAL, LLC
80 BEHARRELL STREET, SUITE E
CONCORD, MASSACHUSETTS 01742

AUGUST 31, 2018

SCALE: N.T.S.

JOB No. 16-079

LATEST REVISION:

CONSTRUCTION DETAILS

SHEET C10.5

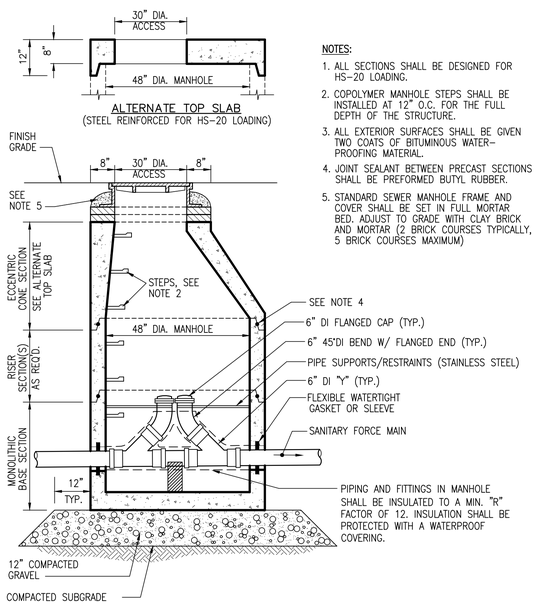

NOTES:

1. ALL SECTIONS SHALL BE DESIGNED FOR HS-20 LOADING.
2. COPOLYMER MANHOLE STEPS SHALL BE INSTALLED AT 12" O.C. FOR THE FULL DEPTH OF THE STRUCTURE.
3. ALL EXTERIOR SURFACES SHALL BE GIVEN TWO COATS OF BITUMINOUS WATER-PROOFING MATERIAL.
4. JOINT SEALANT BETWEEN PRECAST SECTIONS SHALL BE PREFORMED BUTYL RUBBER.
5. STANDARD SEWER MANHOLE FRAME AND COVER SHALL BE SET IN FULL MORTAR BED. ADJUST TO GRADE WITH CLAY BRICK AND MORTAR (2 BRICK COURSES TYPICALLY, 5 BRICK COURSES MAXIMUM)

SANITARY FORCE MAIN INLINE/FLUSHING MANHOLE DETAIL

(NOT TO SCALE)

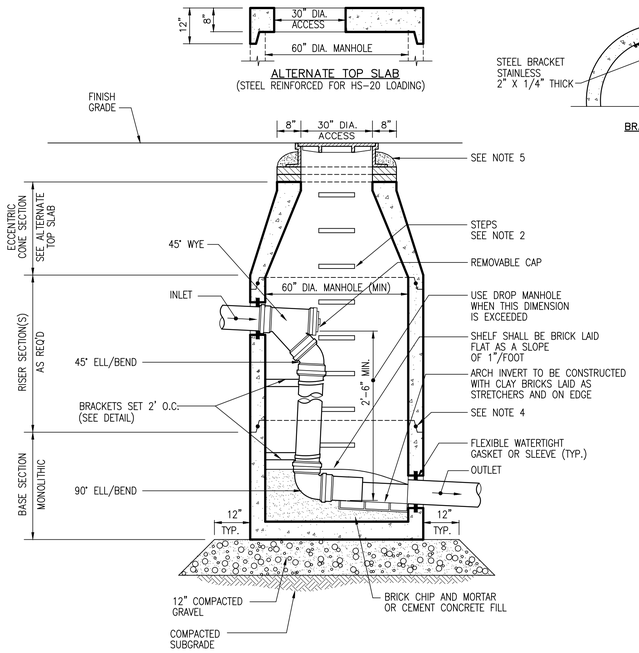

INTERIOR DROP SEWER MANHOLE DETAIL

(NOT TO SCALE)

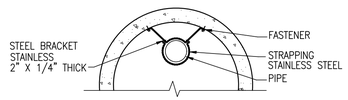

BRACKET DETAIL

NOTES:

1. ALL SECTIONS SHALL BE DESIGNED FOR HS-20 LOADING.
2. COPOLYMER MANHOLE STEPS SHALL BE INSTALLED AT 12" O.C. FOR THE FULL DEPTH OF THE STRUCTURE.
3. ALL EXTERIOR SURFACES SHALL BE GIVEN TWO COATS OF BITUMINOUS WATER-PROOFING MATERIAL.
4. JOINT SEALANT BETWEEN PRECAST SECTIONS SHALL BE PREFORMED BUTYL RUBBER.
5. STANDARD SEWER MANHOLE FRAME AND COVER SHALL BE SET IN FULL MORTAR BED. ADJUST TO GRADE WITH CLAY BRICK AND MORTAR (2 BRICK COURSES TYPICALLY, 5 BRICK COURSES MAXIMUM)

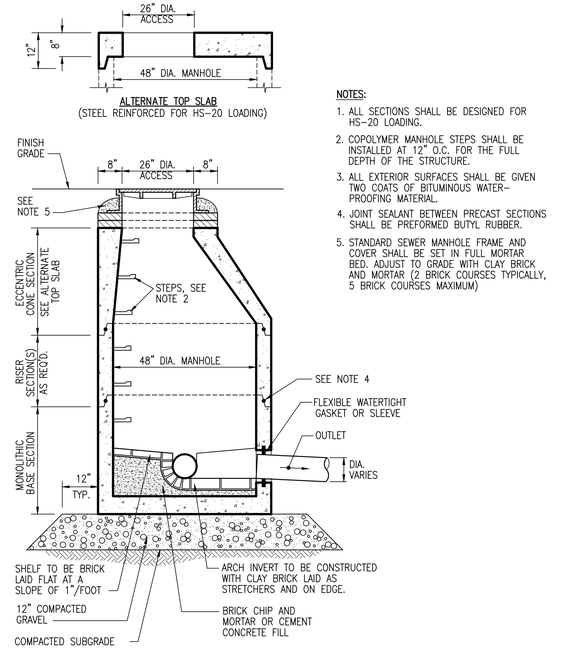

NOTES:

1. ALL SECTIONS SHALL BE DESIGNED FOR HS-20 LOADING.
2. COPOLYMER MANHOLE STEPS SHALL BE INSTALLED AT 12" O.C. FOR THE FULL DEPTH OF THE STRUCTURE.
3. ALL EXTERIOR SURFACES SHALL BE GIVEN TWO COATS OF BITUMINOUS WATER-PROOFING MATERIAL.
4. JOINT SEALANT BETWEEN PRECAST SECTIONS SHALL BE PREFORMED BUTYL RUBBER.
5. STANDARD SEWER MANHOLE FRAME AND COVER SHALL BE SET IN FULL MORTAR BED. ADJUST TO GRADE WITH CLAY BRICK AND MORTAR (2 BRICK COURSES TYPICALLY, 5 BRICK COURSES MAXIMUM)

SEWER MANHOLE DETAIL

(NOT TO SCALE)

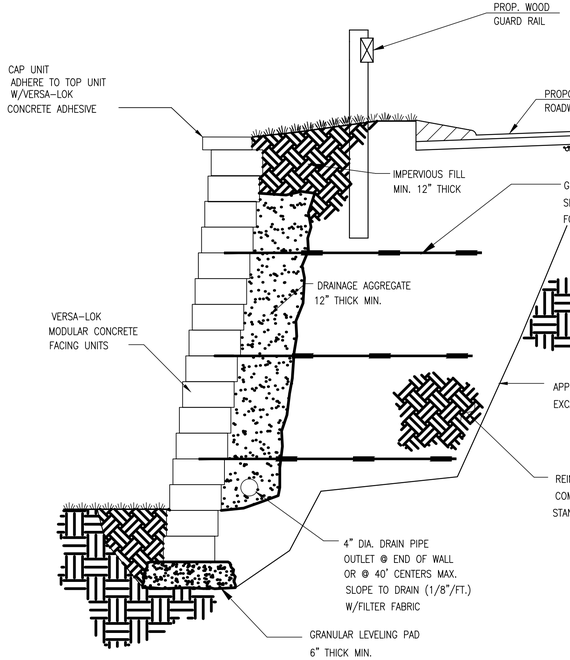

NOTE:

DETAIL PROVIDED FOR GENERAL INFORMATION ONLY. STAMPED FINAL DESIGN OF MODULAR WALL SYSTEM TO BE PROVIDED BY WALL MANUFACTURER BASED ON GEOTECHNICAL ENGINEERS RECOMMENDATIONS PRIOR TO CONSTRUCTION

REINFORCED BLOCK RETAINING WALL DETAIL

(NOT TO SCALE)

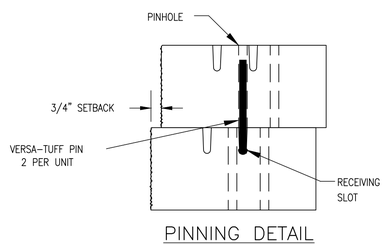

PINNING DETAIL

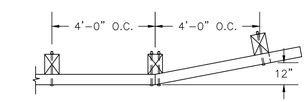

PLAN OF TRANSITION END

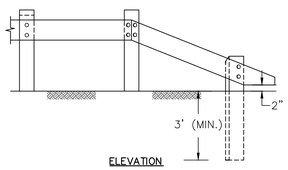

ELEVATION

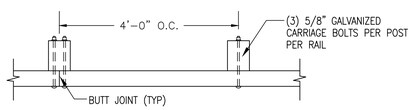

PLAN

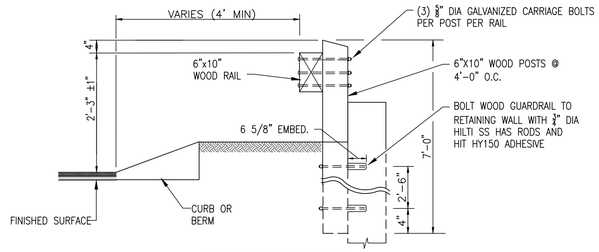

SECTION AT RETAINING WALL

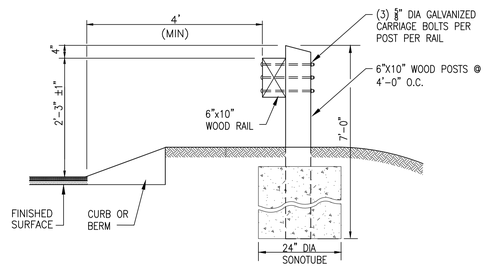

SECTION AT GRADE

NOTES:

1. ALL RAIL AND POST SECTIONS TO BE PRESSURE TREATED #1 SOUTHERN YELLOW PINE OR EQUAL.
2. BOLT CONNECTIONS TO BE DESIGNED BY A REGISTERED PROFESSIONAL STRUCTURAL ENGINEER PRIOR TO CONSTRUCTION.

WOOD GUARDRAIL DETAIL

(NOT TO SCALE)

COPYRIGHT © BY MERRILL CORPORATION
NO PART OF THIS DOCUMENT MAY BE REPRODUCED, STORED IN A RETRIEVAL SYSTEM, OR TRANSMITTED IN ANY FORM OR BY ANY MEANS, ELECTRONIC, MECHANICAL, PHOTOCOPYING, RECORDING, OR OTHERWISE, WITHOUT THE PRIOR WRITTEN PERMISSION OF MERRILL CORPORATION, EXCEPT AS PROVIDED BY LAW OR BY THE RULES OF ANY REGULATORY AUTHORITY WHICH MAY REPRODUCE IT IN CONJUNCTION WITH THE PERFORMANCE OF OFFICIAL BUSINESS UNDER ITS JURISDICTION. ANY MODIFICATIONS MADE TO THIS DOCUMENT WITHOUT THE EXPRESS WRITTEN CONSENT OF MERRILL CORPORATION SHALL RENDER IT UNUSABLE.

REVISIONS

KEY PLAN

COMMONWEALTH OF MASSACHUSETTS
DEBORAH W. KELLER
CIVIL
No. 45874
REGISTERED PROFESSIONAL ENGINEER

DRAWN BY: JG

DESIGNED BY: JG/DWK

CHECKED BY: DWK

Merrill
Engineers and Land Surveyors
427 COLUMBIA ROAD, HANOVER, MA 02339 / T: (781) 826-9200
26 UNION STREET, PLYMOUTH MA 02360 / T: (508) 746-6060
WWW.MERRILLINC.COM

SITE PLAN
WOLCOTT WOODS
MILTON, MASSACHUSETTS

PREPARED FOR: WOLCOTT RESIDENTIAL, LLC
80 BEHARRELL STREET, SUITE E
CONCORD, MASSACHUSETTS 01742

AUGUST 31, 2018

SCALE: N.T.S.

JOB No. 16-079

LATEST REVISION:

CONSTRUCTION DETAILS

SHEET C10.6

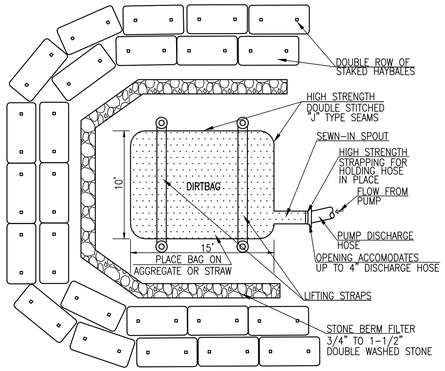

NOTE:
CONTRACTOR WILL KEEP A SUFFICIENT SUPPLY OF HAY BALES, CLEAN STONE AND DIRT BAGS TO ENSURE SILTATION IS CONTROLLED ON SITE. A MINIMUM OF TWO TIMES THE HAY BALES AND STONE ARE NEEDED AND FOUR DIRT BAGS WILL BE KEPT ON SITE.

DIRTBAG DETAIL
(NOT TO SCALE)

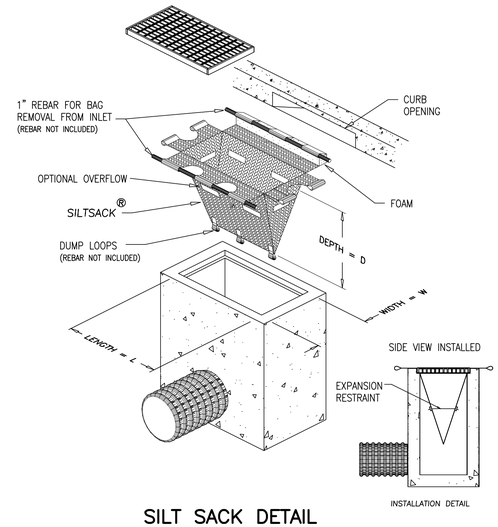

SILT SACK DETAIL
(NOT TO SCALE)

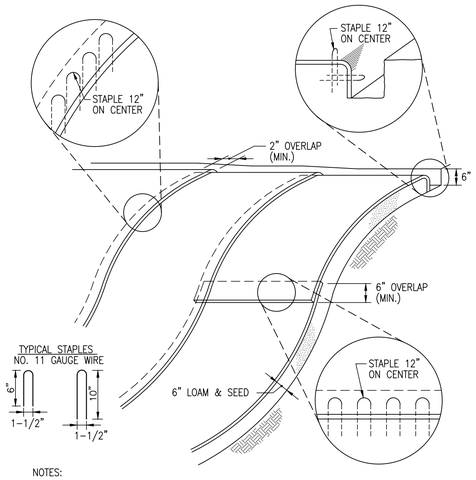

NOTES:
1. BEGIN AT THE TOP OF BLANKET INSTALLATION AREA BY ANCHORING BLANKET IN A 6" DEEP TRENCH BACKFILL AND COMPACT TRENCH AFTER STAPLING.
2. ROLL THE BLANKET DOWN THE SWALE IN THE DIRECTION OF THE WATER FLOW.
3. THE EDGES OF BLANKETS MUST BE STAPLED WITH APPROX. 4 INCH OVERLAP WHERE 2 OR MORE STRIP WIDTHS ARE REQUIRED.
4. WHEN BLANKETS MUST BE SPLICED DOWN THE SWALE, PLACE BLANKET END OVER END WITH 6 INCH (MIN.) OVERLAP AND ANCHOR DOWN SLOPE BLANKET IN A 6 INCH DEEP TRENCH.
5. METHOD OF INSTALLATION SHALL BE AS PER MANUFACTURER'S RECOMMENDATIONS.

EROSION CONTROL BLANKET SLOPE STABILIZATION DETAIL
(NOT TO SCALE)

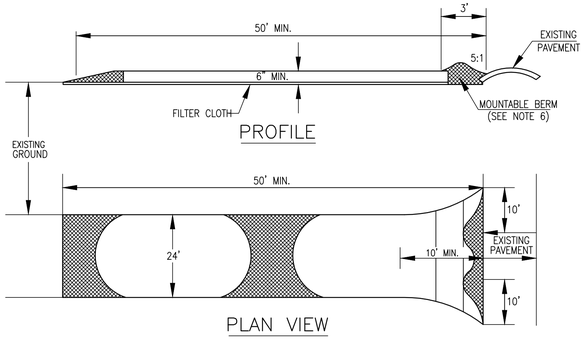

STABILIZED CONSTRUCTION ENTRANCE
(NOT TO SCALE)

SPECIFICATIONS

1. STONE SIZE – USE 2" STONE, OR RECLAIMED OR RECYCLED CONCRETE EQUIVALENT.
2. LENGTH – AS REQUIRED, BUT NOT LESS THAN 50 FT.(EXCEPT ON A SINGLE RESIDENCE LOT WHERE A 30' MINIMUM LENGTH WOULD APPLY).
3. THICKNESS – NOT LESS THAN SIX (6) INCHES.
4. WIDTH – TEN (10) FOOT MINIMUM, BUT NOT LESS THAN THE FULL WIDTH AT POINTS WHERE INGRESS OR EGRESS OCCURS.
5. FILTER CLOTH – WILL BE PLACED OVER THE ENTIRE AREA PRIOR TO PLACING OF STONE. FILTER WILL NOT BE REQUIRED ON A SINGLE FAMILY RESIDENCE LOT.
6. SURFACE WATER – ALL SURFACE WATER FLOWING OR DIVERTED TOWARD CONSTRUCTION ENTRANCES SHALL BE PIPED ACROSS THE ENTRANCE. IF PIPING IS IMPRACTICAL, A MOUNTABLE BERM WITH 5:1 SLOPES WILL BE PERMITTED.
7. MAINTENANCE – THE ENTRANCE SHALL BE MAINTAINED IN A CONDITION WHICH WILL PREVENT TRACKING OR FLOWING OF SEDIMENT ONTO PUBLIC RIGHTS-OF-WAY. THIS MAY REQUIRE PERIODIC TOP DRESSING WITH ADDITIONAL STONE AS CONDITIONS DEMAND AND REPAIR AND/OR CLEANOUT OF ANY MEASURES USED TO TRAP SEDIMENT. ALL SEDIMENT SPILLED, DROPPED, WASHED OR TRACKED ONTO PUBLIC RIGHTS-OF-WAYS MUST BE REMOVED IMMEDIATELY.
8. WASHING – WHEELS SHALL BE CLEANED TO REMOVE SEDIMENT PRIOR TO ENTRANCE ONTO PUBLIC RIGHTS OF WAY. WHEN WASHING IS REQUIRED, IT SHALL BE DONE ON AN AREA STABILIZED WITH STONE AND WHICH DRAINS INTO AN APPROVED SEDIMENT TRAPPING DEVICE.
9. PERIODIC INSPECTION AND NEEDED MAINTENANCE SHALL BE PROVIDED AFTER EACH RAIN.

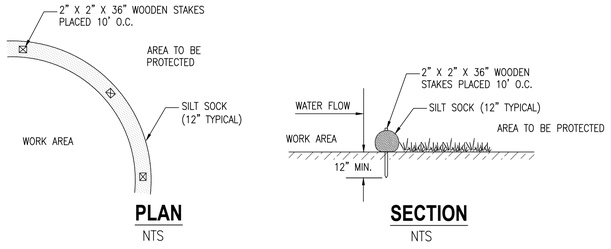

NOTE: REFER TO THE PLAN FOR PROPOSED LOCATION.

SILT SOCK DETAIL
(NOT TO SCALE)

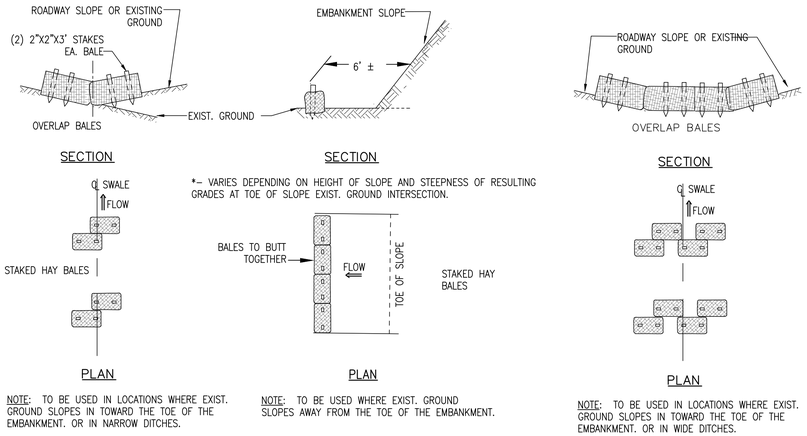

NOTE: TO BE USED IN LOCATIONS WHERE EXIST. GROUND SLOPES IN TOWARD THE TOE OF THE EMBANKMENT. OR IN NARROW DITCHES.

NOTE: TO BE USED WHERE EXIST. GROUND SLOPES AWAY FROM THE TOE OF THE EMBANKMENT.

NOTE: TO BE USED IN LOCATIONS WHERE EXIST. GROUND SLOPES IN TOWARD THE TOE OF THE EMBANKMENT. OR IN WIDE DITCHES.

TEMPORARY EROSION CONTROL DETAILS
(NOT TO SCALE)

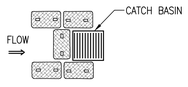

NOTE: TO BE USED AROUND CATCH BASINS.

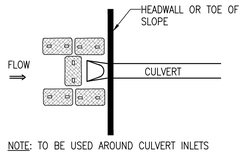

NOTE: TO BE USED AROUND CULVERT INLETS

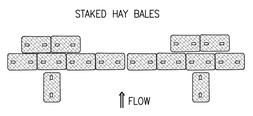

BOTTOM OF FILL SLOPE

NOTE: TO BE USED AT BOTTOM OF FILL SLOPE WHERE HEAVY FLOW MAY BE ANTICIPATED

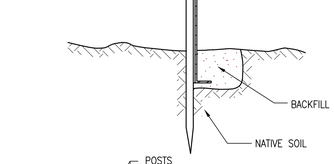

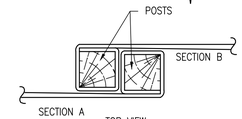

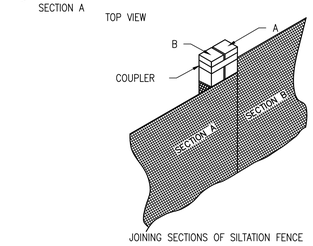

JOINING SECTIONS OF SILTATION FENCE

CONSTRUCTION NOTES:
1) SILTATION FENCE TO BE FASTENED SECURELY TO FENCE POSTS WITH WIRE TIES OR STAPLES.
2) WHEN TWO SECTIONS OF FILTER CLOTH ADJOIN EACH OTHER, THEY SHALL BE OVERLAPPED BY 6 INCHES AND FOLDED.
3) MAINTENANCE SHALL BE PERFORMED AS NEEDED AND MATERIAL REMOVED WHEN "BULGES" DEVELOP IN THE SILT FENCE.

SILT FENCE DETAIL
(NOT TO SCALE)

COPYRIGHT © BY MERRILL CORPORATION
NO PART OF THIS DOCUMENT MAY BE REPRODUCED, STORED IN A RETRIEVAL SYSTEM, OR TRANSMITTED IN ANY FORM OR BY ANY MEANS, ELECTRONIC, MECHANICAL, PHOTOCOPYING, RECORDING, OR OTHERWISE, WITHOUT THE PRIOR WRITTEN PERMISSION OF MERRILL CORPORATION, UNLESS SUCH COPYING IS EXPRESSLY PERMITTED BY FEDERAL COPYRIGHT LAW OR UNDER THE TERMS OF A LICENSE ISSUED BY THE APPROPRIATE REPRODUCTION RIGHTS ORGANIZATION. YOU MAY NOT ALTER OR REMOVE THIS COPYRIGHT NOTICE OR OTHER NOTICE FROM COPIES OR PHOTOCOPIES YOU MAKE. IF YOU REFER TO THIS DOCUMENT ON A WEBSITE, YOU MUST LINK TO THE MERRILL CORPORATION HOME PAGE RATHER THAN TO THIS DOCUMENT. YOU MAY NOT MODIFY THE INFORMATION CONTAINED IN THIS DOCUMENT FOR ANY PURPOSE. YOU MAY NOT MODIFY OR REUSE THE DOCUMENT AS PART OF ANY OTHER WORK. YOU MAY NOT USE THIS DOCUMENT IN ANY MANNER THAT IS DEFAMATORY, OBSCENE, OR SHOWS DISRESPECT. YOU MAY NOT USE THIS DOCUMENT IN ANY MANNER THAT VIOLATES ANY LAW OR REGULATION IN ANY JURISDICTION. YOU MAY NOT USE THIS DOCUMENT FOR ANY PURPOSE OR IN ANY MANNER THAT IS UNLAWFUL, OR PROHIBITED BY THE TERMS OF USE OF ANY REGULATORY AUTHORITY WHICH MAY REPRODUCE IT IN CONJUNCTION WITH THE PERFORMANCE OF OFFICIAL BUSINESS UNDER ITS JURISDICTION. ANY MODIFICATIONS MADE TO THIS DOCUMENT WITHOUT THE EXPRESS WRITTEN CONSENT OF MERRILL CORPORATION SHALL RENDER IT UNUSABLE.

REVISIONS

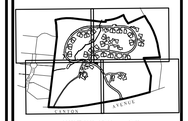

KEY PLAN

COMMONWEALTH OF MASSACHUSETTS
DEBORAH W. KELLIER
CIVIL
No. 45874
REGISTERED PROFESSIONAL ENGINEER

DRAWN BY: JG

DESIGNED BY: JG/DWK

CHECKED BY: DWK

Merrill Surveyors
Engineers and Land Surveyors
427 COLUMBIA ROAD, HANOVER, MA 02339 / T: (781) 826-9200
26 UNION STREET, PLYMOUTH MA 02360 / T: (508) 746-6060
WWW.MERRILLINC.COM

SITE PLAN
WOLCOTT WOODS
MILTON, MASSACHUSETTS

PREPARED FOR: WOLCOTT RESIDENTIAL, LLC
80 BEHARRELL STREET, SUITE E
CONCORD, MASSACHUSETTS 01742

AUGUST 31, 2018

SCALE: N.T.S.

JOB No. 16-079

LATEST REVISION:

CONSTRUCTION DETAILS

SHEET C10.7

MA GRID NAD 83

PROJECT AREA:
2,049,686± S.F. OR 47.054± ACRES

OVERALL OPEN SPACE AREA:
1,247,913± S.F. OR 28.648± ACRES (60.88%)



80 0 80 160
SCALE IN FEET

COPYRIGHT © BY MERRILL CORPORATION
NO PART OF THIS DOCUMENT MAY BE REPRODUCED, STORED IN A RETRIEVAL SYSTEM, OR TRANSMITTED IN ANY FORM OR BY ANY MEANS, ELECTRONIC, MECHANICAL, PHOTOCOPYING, RECORDING OR OTHERWISE, WITHOUT THE EXPRESS WRITTEN CONSENT OF MERRILL CORPORATION WITH THE EXCEPTION OF ANY REGULATORY AUTHORITY WHICH MAY REPRODUCE IT IN CONJUNCTION WITH THE PERFORMANCE OF OFFICIAL BUSINESS UNDER ITS JURISDICTION. ANY MODIFICATIONS MADE TO THIS DOCUMENT WITHOUT THE EXPRESS WRITTEN CONSENT OF MERRILL CORPORATION SHALL RENDER IT UNUSABLE.

REVISIONS

KEY PLAN

COMMONWEALTH OF MASSACHUSETTS
DEBORAH W. KELLIER
CIVIL
No. 45874
REGISTERED PROFESSIONAL ENGINEER

DRAWN BY: JG

DESIGNED BY: JG/DWK

CHECKED BY: DWK

Merrill
Engineers and Land Surveyors
427 COLUMBIA ROAD, HANOVER, MA 02339 / T: (781) 826-9200
26 UNION STREET, PLYMOUTH MA 02360 / T: (508) 746-6060
WWW.MERRILLINC.COM

SITE PLAN
WOLCOTT WOODS
MILTON, MASSACHUSETTS

PREPARED FOR: WOLCOTT RESIDENTIAL, LLC
80 BEHARRELL STREET, SUITE E
CONCORD, MASSACHUSETTS 01742

AUGUST 31, 2018

SCALE: 1" = 80'

JOB No. 16-079

LATEST REVISION:

OPEN SPACE AREA PLAN

SHEET OS1.1

OPEN SPACE BOUNDARY

WOODLANDS
--TREE CARE, INVASIVE MANAGEMENT, AS WARRANTED

OPEN FIELDS
--ANNUAL/ BIANNUAL MOWING

HISTORIC LAWN
--WEEKLY MOWING AS NEEDED

AREAS TO RE-FOREST

PATH TO THE DCR CARBERRY TRAIL

Upper Woods

Pine Woods

Wolcott Grove

Brook Glenn

Beech Grove

Upper Meadow

REFOREST

Esker Woods

House Manor Lawn

Devens Meadow

Pine Field

BLDG #1
BLDG #2
BLDG #3
BLDG #4
BLDG #5
BLDG #6
BLDG #7
BLDG #8
BLDG #9
BLDG #10
BLDG #11
BLDG #12
BLDG #13
BLDG #14
BLDG #15
BLDG #16
BLDG #17
BLDG #18
BLDG #19
BLDG #20
BLDG #21
BLDG #22
BLDG #23
BLDG #24
BLDG #25
BLDG #26
BLDG #27
BLDG #28
BLDG #29
BLDG #30
BLDG #31

MANOR HOUSE
DEVENS HOUSE
WOLCOTT HOUSE

CANTON AVENUE PATH

0 40 80 160
SCALE: 1" = 80'-0"

MANAGEMENT SUMMARY

AREAS AROUND HOMES:
-- TO BE TYPICAL OF HOME LANDSCAPES: CONSISTING OF SHADE AND ORNAMENTAL TREES, FOUNDATION PLANTING, AND IRRIGATED AND MOWN LAWNS
--TO BE MAINTAINED IN A FASHION TYPICAL OF HOME LANDSCAPES WITH WEEKLY MOWING AND SEASONAL PRUNING
-- ALL PLANTINGS TO BE NATIVE OR NON-INVASIVE
--TURF AND PLANTINGS TO BE MANAGED TO MAXIMIZE DROUGHT TOLERANCE

OPEN SPACE HISTORIC LAWN
--TO BE MOWN WEEKLY OR AS NEEDED

OPEN SPACE MEADOWS / FIELDS:
--TO BE MOWN ON AN ANNUAL AND/OR BIANNUAL BASIS AT THE END OR WITHIN THE MIDDLE THIRD OF THE GROWING SEASON
--CLIPPINGS SHALL BE LEFT ON SITE

OPEN SPACE EXISTING WOODS AND AREA TO NATURALIZE:
--MOWING/CUTTING PROHIBITED EXCEPT FOR THE REMOVAL OF HAZARDOUS OR DISEASED TREES OR THE REMOVAL OR CONTROL OF INVASIVE SPECIES AND OR MAINTENANCE OF SITE UTILITIES OR OTHER PERMITTED USES

PATHS:
--THE CANTON AVENUE PATH AND THE DCR CARBERRY TRAIL PATH SHALL BE WOODCHIP OR GRAVEL
--THE SURFACES SHALL BE RENEWED ON AS AS-NEEDED BASIS AND MAINTAINED TO BE FREE OF OBSTRUCTION OR OBSTRUCTING GROWTH.
--SNOW REMOVAL SHALL NOT BE PERFORMED ON THESE PATHS

REVISIONS

KEY PLAN

DRAWN BY: AA/ZK/MW

DESIGNED BY: AA

CHECKED BY: AA

RYAN ASSOCIATES
LANDSCAPE ARCHITECTURE AND PLANNING
144 Moody Street, Building 4
Waltham, MA 02453-5332
ph: 781 - 314 - 0401
www.ryan-assoc.com

MANAGEMENT PLAN
WOLCOTT WOODS
MILTON, MASSACHUSETTS

PREPARED FOR: WOLCOTT RESIDENTIAL, LLC
80 BEHARRELL STREET, SUITE E
CONCORD, MASSACHUSETTS 01742

AUGUST 31, 2018

SCALE:

JOB No.

LATEST REVISION:

OS-1.2
SHEET